glass outlet

HIGHEST QUALITY
LOWEST PRICES

WHOLESALE & TRADE ONLY

HAMPTONS fencing

What you'll find inside

V3

Full privacy fencing
Combo – full privacy + slat topper
Semi privacy fencing
3 rail fencing
Vertical paling fencing

glass outlet

The essentials.

PAGE 6
Our Hamptons fencing range

PAGE 8
Full privacy fencing

PAGE 27
Combo fencing

PAGE 43
Semi privacy fencing

PAGE 57
3 Rail fencing

PAGE 67
Vertical paling fencing

PAGE 84
Gate hardware

PAGE 91
Gate layout information

PAGE 94
Hamptons letterbox & accessories

PAGE 99
Hamptons planter box

Advantages of Glass Outlet

Wholesale & trade only supplier

Our focus is providing complete solutions to the trade only. This clear focus allows us to provide the best customer service & quality products to the trade.

High quality products

We pride ourselves on attention to detail in all aspects of sourcing and supplying products. We look domestically and worldwide for factories with the skills and equipment capable of manufacturing the highest quality product at a competitive price. Our quality control team regularly visit our factories to ensure our high standards are always being met.

Lowest price guarantee

Having regard to the costs of sophisticated sourcing, quality control management, operating distribution facilities & providing the best customer service, we pass on the lowest prices possible. We believe that complimentary business can only be achieved when we operate under this discipline.

One stop shop

To save you time, we aim to provide complete systems at one purchase destination with the best price. Being a one stop shop also enables us to control the quality of the whole system. We consistently update catalogues and online capabilities to improve customer experiences.

Delivery to your door

With multiple distribution centres across the country with products in stock & dedicated delivery trucks, we aim to provide fast delivery every time. As well as utilising our own trucks, we've developed strong relationships with key transport providers across Australia so we can deliver even when the job is not so close to home.

Easy installation

We design products with installation considerations in mind to ensure they are as easy to install as possible to save you time on site. Many products offered have handy installation advantages built in.

Due to space restrictions, not all stock featured in this catalogue is stocked at all depots.

We recommend touching base with your closest depot prior to order placement if unsure.

glass outlet

Hamptons
fencing

Our Hamptons Fencing range – a white PVC fencing system available in full privacy, combo, vertical paling semi privacy, semi privacy & 3 rail styles.
Hamptons Fencing is amazingly cost effective and is visually stunning!

EASY ASSEMBLY

Panels are flat packed in a box ready for quick and easy assembly. Posts have pre-punched holes for easy install.

FULL PRIVACY AND SEMI PRIVACY OPTIONS

Full privacy with a stylish vertical profile and top/bottom rails for a 'solid wall' finish at 1800mm high.

Also available as a **COMBO** configuration with full privacy to approx. 1450mm high finished with semi privacy vertical slat toppers.

Semi privacy features 38x38mm pickets and is ideal for front/ boundary fencing at 1200mm high.

Another **semi privacy** option features vertical palings 78mm wide with 58.5mm gaps.

3 rail fencing is an ideal cost effective boundary fencing solution.

NO PAINTING REQUIRED

No need for painting or staining like standard white timber fences. The durable PVC finish will not rust or tarnish in an outdoor environment, offering a crisp white finish.

UV STABLE PRODUCT

Formulation contains UV inhibitors and Titanium Dioxide additive which provide vital hardiness to withstand weathering and light damage.

WIDTH & HEIGHT ADJUSTABLE

Panels can be easily adjusted in width and height.

DURABLE PVC CONSTRUCTION

Durable and long lasting outdoor material. Does not absorb moisture so will not blister, rot, or peel

COMPLETE RANGE

All components available including panels, gates, base plates, caps and more.

EXTREMELY COST EFFECTIVE

glass outlet

FULL PRIVACY FENCING —

Ideal solid wall solution

› Gates: 1800mm H x 1000mm W
› Panels: 1800mm H x 2388mm W

1. **Top rail** (152mm H x 2388mm W x 51mm D)
2. **Post top cap**
3. **Post** (2500mm H x 127mm W x 127mm D)
4. **U channel** (1495mm H x 27mm W x 25mm D)
5. **Panel** (1565mm H x 289mm W x 22mm D)
6. **Bottom rail** (152mm H x 2388mm W x 51mm D w/ aluminium insert)

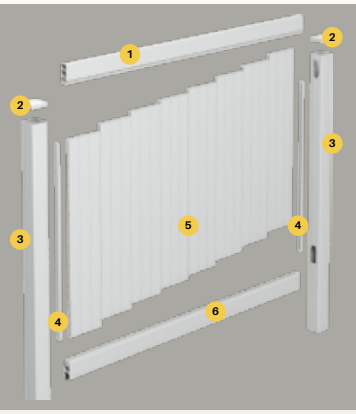

COMBO FENCING

Stylish solution combining full privacy and semi privacy vertical slats

› Gates: 1800mm H x 1000mm W
› Panels: 1800mm H x 2388mm W

1. **Top rail** (89mm H x 2388mm W x 51mm D)
2. **Post top cap**
3. **Vertical slats** (330mm H x 76mm W x 22mm D)
4. **Mid rail** (152mm H x 2388mm W x 51mm D)
5. **Post** (2500mm H x 127mm W x 127mm D)
6. **U channel** (1145mm H x 27mm W x 25mm D)
7. **Panel** (1215mm H x 289mm W x 22mm D)
8. **Bottom rail** (152mm H x 2388mm W x 51mm D)

VERTICAL PALING FENCING

Ideal for front/boundary fencing

› Gates: 1800mm H x 1205mm W
› Panels: 1800mm H x 2388mm W

1. **Top rail** (89mm H x 2388mm W x 51mm D)
2. **Post top cap**
3. **Post** (2590mm H x 102mm W x 102mm D)
4. **Vertical palings** (1690mm H x 76mm W x 22mm D)
5. **Bottom rail** (89mm H x 2388mm W x 51mm D)
6. **Midrail** (89mm H x 2388mm W x 51mm D)

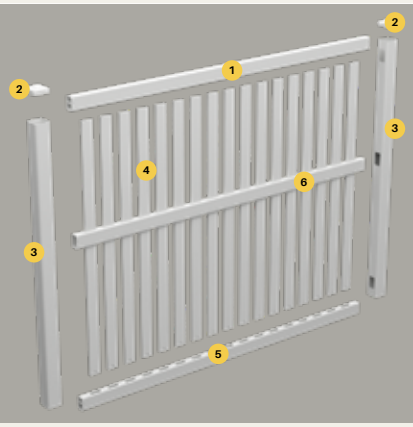

SEMI PRIVACY FENCING

Ideal for front/boundary fencing

› Gates: 1200mm H x 1000mm W
› Panels: 1200mm H x 2388mm W

1. **Top rail** (89mm H x 2388mm W x 51mm D)
2. **Post top cap**
3. **Post** (1900mm H x 102mm W x 102mm D)
4. **Mid-rail** (89mm H x 2388mm W x 51mm D)
5. **Pickets** (785/1030mm H x 38mm W x 38mm D)
6. **Bottom rail** (152mm H x 2388mm W x 51mm D w/ aluminium insert)

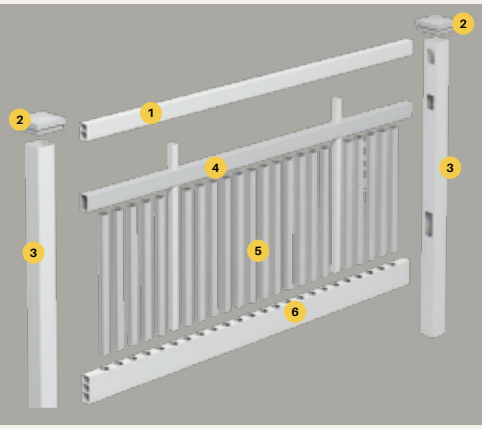

3 RAIL FENCING

Ideal for front/boundary fencing

› Gates: 1300mm H x 1800mm W
(width adjustable)
› Panels: 1350mm H x 2388mm W
(heights between 1200mm & 1400mm achievable)

1. **Rails** (140mm H x 2388mm W x 38mm D)
2. **Post top cap**
3. **Post** (2050mm H x 127mm W x 127mm D)

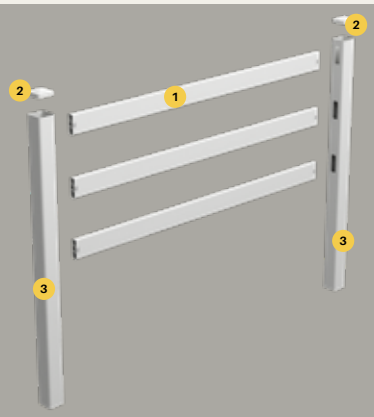

glass outlet

FULL PRIVACY FENCING

FULL PRIVACY FENCING

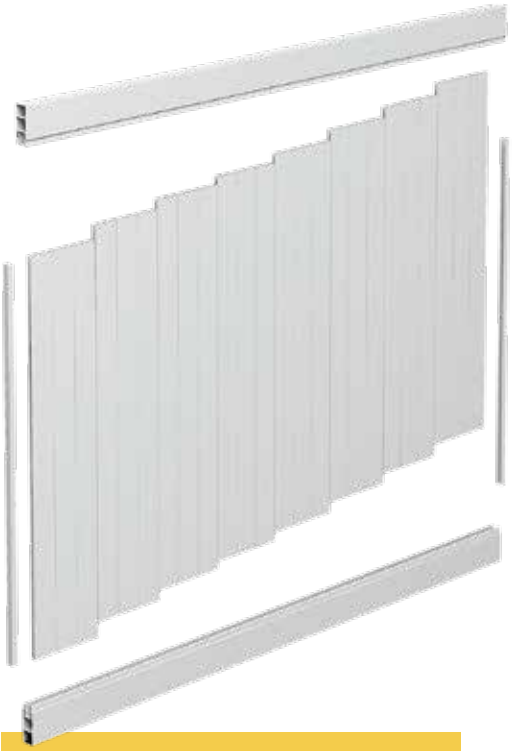

KIT INCLUSIONS

- 1x top rail (2388mm W)
- 1x bottom rail (2388mm W) w/ aluminium insert
- 8x vertical panels (1565mm H x 289mm W)
- 2x end U channels (1495mm H)

Full privacy panel kit

2388MM WIDE
1800MM HIGH

Order Code: **HF-FULLP-PANEL**

- Flat pack kit in a box – easy assembly
- White UV stabilised PVC with protective titanium dioxide additives
- Panels have stylish shiplap grooves, are tongue & groove and slot neatly into each other

TECH SPECS

- Horizontal Rails: 2388mmW x 152mmH x 50.8mmD; 2.3mm wall thickness
- Bottom rail includes aluminium insert for extra rigidity
- Vertical Panels: 1565mmH x 289mmW x 22mmD; 1.3mm wall thickness
- Achieves overall panel height of 1800mm
- Panel and rails can be easily cut in width and height

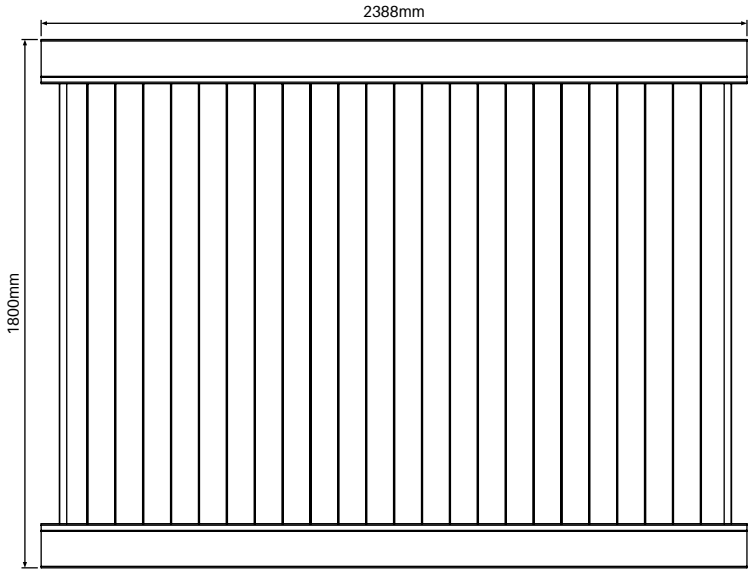

FULLY ASSEMBLED GATE

NO ASSEMBLY REQUIRED

Full privacy gate

1000MM WIDE
1800MM HIGH

Order Code: **HF-FULLP-GATE**

- Fully assembled gate including 2 x flat top caps
- White UV stabilised PVC with protective titanium dioxide additives
- Vertical panels have stylish shiplap grooves

TECH SPECS

- Bottom rail includes aluminium insert for extra rigidity
- Vertical side posts/rails are 1850mmH x 102mmW x 63mmD; 3mm wall thickness
- Distance between top & bottom rail is 1800mm
- Includes 4 x aluminium internal inserts for rigidity (refer cross hatch area in drawing). Install hinges & latch in these areas for maximum fixing strength
- Gate cannot be width or height adjusted

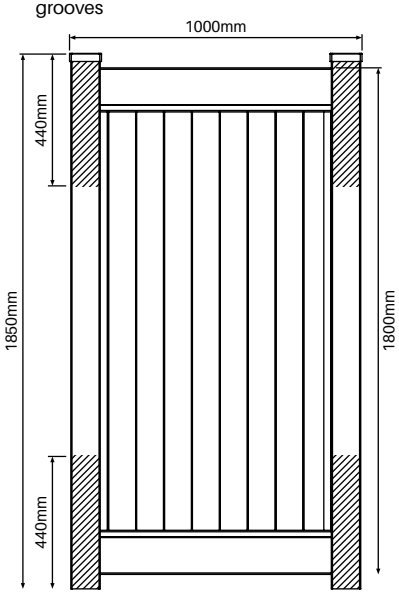

Images & drawings are not to scale

glass outlet

FULL PRIVACY FENCING

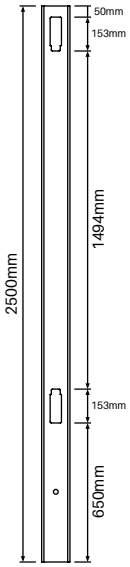

127MM X 127MM

1 way post – Full privacy

2500MM LONG

Order Code: **HF-FULLP-2500-1W**

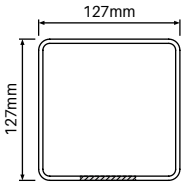

SLOTTED 1 SIDE ONLY

TECH SPECS

- 2500mmH x 127mmW x 127mmD; 3.8mm wall thickness
- White UV stabilised PVC with protective titanium dioxide additives
- 153mmH x 52mmW slotted holes for panel top/bottom rail insertion
- Use as start or finish post.
- Top cap sold separately
- Not suitable for hinging or latching a gate. Use gate post for that application (Code: HF-FULLP-2500-1WGP)

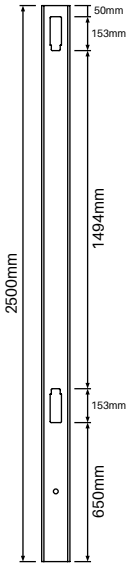

127MM X 127MM

2 way post – Full privacy

2500MM LONG

Order Code: **HF-FULLP-2500-2W**

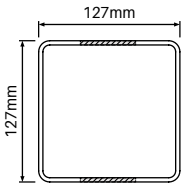

SLOTTED BOTH SIDES

TECH SPECS

- 2500mmH x 127mmW x 127mmD; 3.8mm wall thickness
- White UV stabilised PVC with protective titanium dioxide additives
- 153mm high x 52mm wide slotted holes both sides of post for panel top/bottom rail insertion
- Use as inline post for straight fencing run
- Top cap sold separately

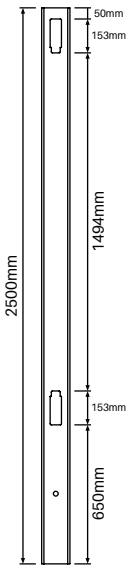

127MM X 127MM

90° post – Full privacy

2500MM LONG

Order Code: **HF-FULLP-2500-90**

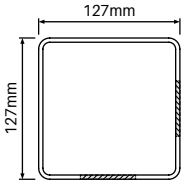

SLOTTED 2 SIDES
AT 90⁰

TECH SPECS

- 2500mmH x 127mmW x 127mmD; 3.8mm wall thickness
- White UV stabilised PVC with protective titanium dioxide additives
- 153mmH x 52mmW slotted holes on adjacent sides for panel top/bottom rail insertion
- Use at 90 degree corner
- Top cap sold separately

Images & drawings are not to scale

FULL PRIVACY FENCING

127MM X 127MM

Full post 'No slot holes ' - Full privacy

2500MM LONG

Order Code: **HF-FULLP-2500-FP**

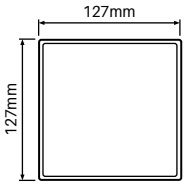

TECH SPECS

- 2500mmH x 127mmW x 127mmD; 3.8mm wall thickness
- White UV stabilised PVC with protective titanium dioxide additives
- No slot holes – cut slot holes wherever needed
- Use hole cutting jig (code: HF-FULLP-JIG) to assist routing holes if required
- Useful for panels with sloping ground for stepping panels
- Ideal for height adjusted panels where slot hole positions are different to standard posts with pre-routed holes
- Brackets may also be affixed to post for holding panel top/botom rails (code: HF-FULLP-WB-2PK) – an alternative to routing slot holes

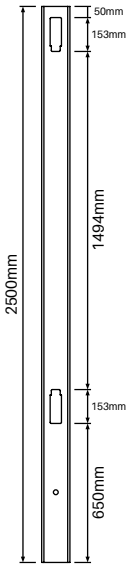

127MM X 127MM

1 way gate post – Full privacy

2500MM LONG

Order Code: **HF-FULLP-2500-1WGP**

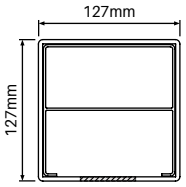

SLOTTED 1 SIDE
INCLUDES ALUMINIUM INSERT

TECH SPECS

- 2500mmH x 127mmW x 127mmD; 3.8mm wall thickness
- White UV stabilised PVC with protective titanium dioxide additives
- 153mmH x 52mmW slotted holes for panel top/ bottom rail insertion
- Use as hinge post or latch post
- Includes internal 2mm thick aluminium insert entire length of post (ie 2500mm long). Provides post rigidity and also, sturdy substrate for fixing of hinges or latch
- Top cap sold separately

HEAVY DUTY

Concealed base plate

620MM HIGH

Order Code: **HF-FULLP-BP**

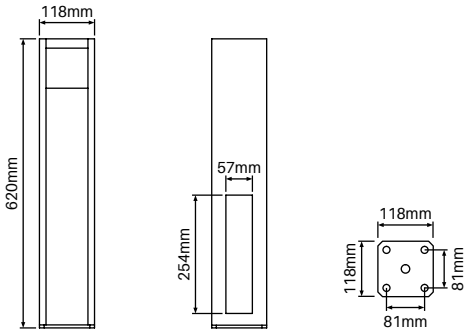

TECH SPECS

- Internal fitting base plate suits 1 way, 2 way and 90 degree posts. Not suitable for use with 1 way 'gate' post
- 6mm thick base plate with 2mm thick vertical walls
- Cold-galvanized steel provides strong corrosion resistance
- 4 x fixing holes in base plate
- Post sleeves over base plate and fixes to internal base plate with tek screws. Use 2 part domical cover to hide screw fixings.
- Base plate system not suitable for use where wind load considerations required
- **Refer install guide on page 18** for fitting information

Images & drawings are not to scale

FULL PRIVACY FENCING

HEAVY DUTY

Concealed base plate

1750MM HIGH

Order Code: **HF-FULLP-BP-1750**

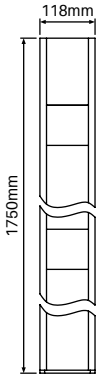

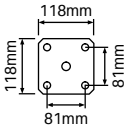

TECH SPECS

- Internal fitting base plate suits 1 way post.
- Enables base plate fitting of 1 way post for use as a hinge and/or latch post
- 6mm thick base plate with 2mm thick vertical walls.
- 1750mm high vertical walls provide post rigidity also, sturdy substrate for fixing of hinges and/or latch
- Cold-galvanized steel provides strong corrosion resistance
- 4 x fixing holes in base plate
- Post sleeves over base plate and fixes to internal base plate with tek screws. Use 2 part domical cover to hide screw fixings
- Base plate system not suitable for use where wind load considerations required

I beam

Order Code: **HF-FULLP-BEAM-1800**

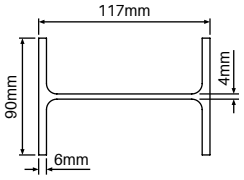

TECH SPECS

- 1800mmH I beam stiffener
- Alloy 6063 T5; mill finish
- Fits inside 1 way or 2 way posts. Cannot be used with 90 degree post or gate post
- Use where wind load is a consideration. Post stiffener will allow up to N4/C2 (AS4055 classification)
- **Refer install guide on page 17**

Hole cutting jig

Order Code: **HF-FULLP-JIG**

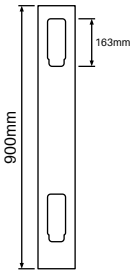

TECH SPECS

- Made from SS304
- Jig provides slot hole required in 127x127mm post for top & bottom rail insertion
- New post slot holes may be required if stepping panels for sloping ground or if panels are height adjusted requiring change of distance between standard post slot holes
- Route hole prior to post installation
- Jig suits use with 6.35mm 1/4" trimmer with 16mm diameter guide (eg Makita DRT50ZJX2 trimmer)

Images & drawings are not to scale

FULL PRIVACY FENCING

Wall/post brackets

2 PACK

Order Code: **HF-FULLP-WB-2PK**

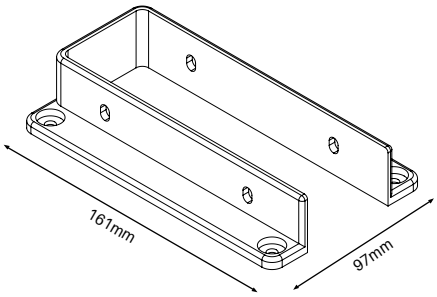

TECH SPECS

- 2 pack of brackets
- Affix to existing post or wall to start or end run of full privacy fencing
- Includes 8x screws for fixing off brackets to top/bottom rails + 8x cover caps to hide screws
- White UV stabilised PVC with protective titanium dioxide additives
- Fixings for screwing brackets to post or wall not supplied

Hamptons fencing tool

Order Code: **HF-TOOL**

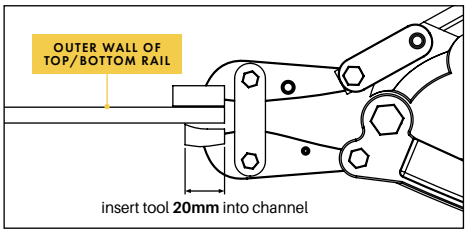

TECH SPECS

- Tool creates a protruding flap/tag at the end of the horizontal top & bottom rail which prevents the rail pulling out from slots in posts
- Specially designed tooling in jaw creates the protruding flap/tag

HOW TO USE

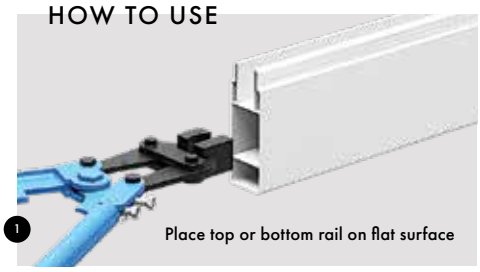

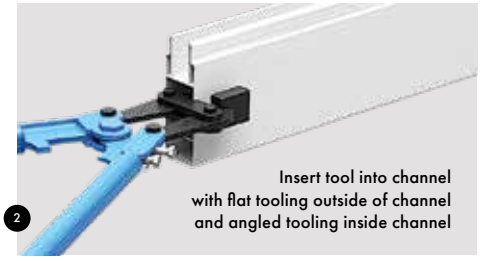

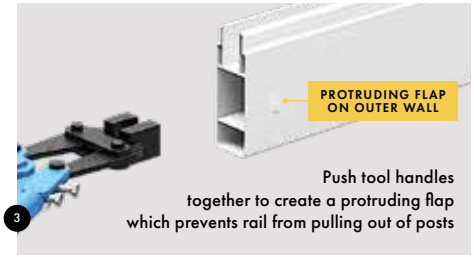

Post plugs

4 PACK

White finish

Order code: **SS-POSTPLUG-4PK-W**

- Ø32mm outer top suits 25mm hole
- Ideal for covering hole in post when affixing post to wall with inner fixing
- Suits post wall thickness 1.5mm – 3.2mm

1 Drill a 25mm diameter hole through front wall of post

2 Drill rear wall of post with required diameter for fixing and then fix post to wall. Insert appropriate fixing into the wall for affixing post

4 Repeat the process as required

**Black plug shown in imagery above. Plugs supplied are white.*

Self drilling tek screws

12Gx20mm – BAG OF 100

Order Code: **SS-TS-100-B (Black)**
SS-TS-100-W (White)

- Self drilling tek screw featuring integrated thread and drill/cutting tip
- 12G x 20mm tek screw with hex head
- Packed in convenient bags of 100 screws

Images & drawings are not to scale

FULL PRIVACY FENCING

2 part domical cover

Order Code: **HF-FULLP-DC**

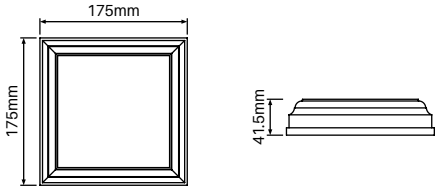

TECH SPECS

- 2 part domical cover – suits 127x127mm post
- Can be fitted after post and panels installed. 2 parts neatly clip together
- White UV stabilised PVC with protective titanium dioxide additives
- Provides a stylish post finish

English style cap

Order Code: **HF-FULLP-EC**

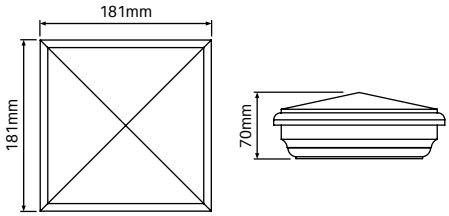

TECH SPECS

- Press on external fit cap
- 'English' style cap with tapered top provides a decorative finish
- White UV stabilised PVC with protective titanium dioxide additives
- Use silicone for long term binding

Slimline tapered cap

Order Code: **HF-FULLP-STC**

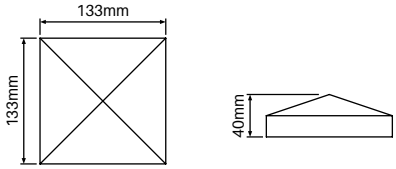

TECH SPECS

- Press on external fit cap
- Slimline tapered cap for minimalist post finishing
- White UV stabilised PVC with protective titanium dioxide additives
- Use silicone for long term binding

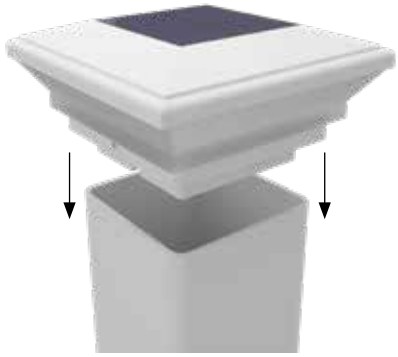

Solar post light

Order Code: **HF-SOLAR-127**

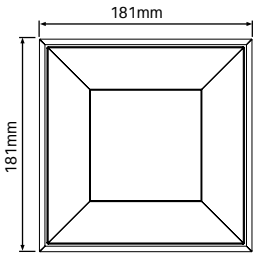

TECH SPECS

- Use solar light instead of standard cap for top 127mmx127mm square posts
- Suits 1 way, 2 way, 90 degree, full and gate posts
- Light automatically turns on when no light source detected. With full charge, light stays on continuously for approx. 8 hours
- Internal replaceable battery lasts approx. 1.5 years. Easy to replace. (2 x Ni-MH AA 1.2V batteries)

** Refer www.productinstall.com.au/hamptons (password: hamptons1) for guidance on install of solar light and replacement of batteries.*

FULL PRIVACY FENCING INSTALL GUIDE

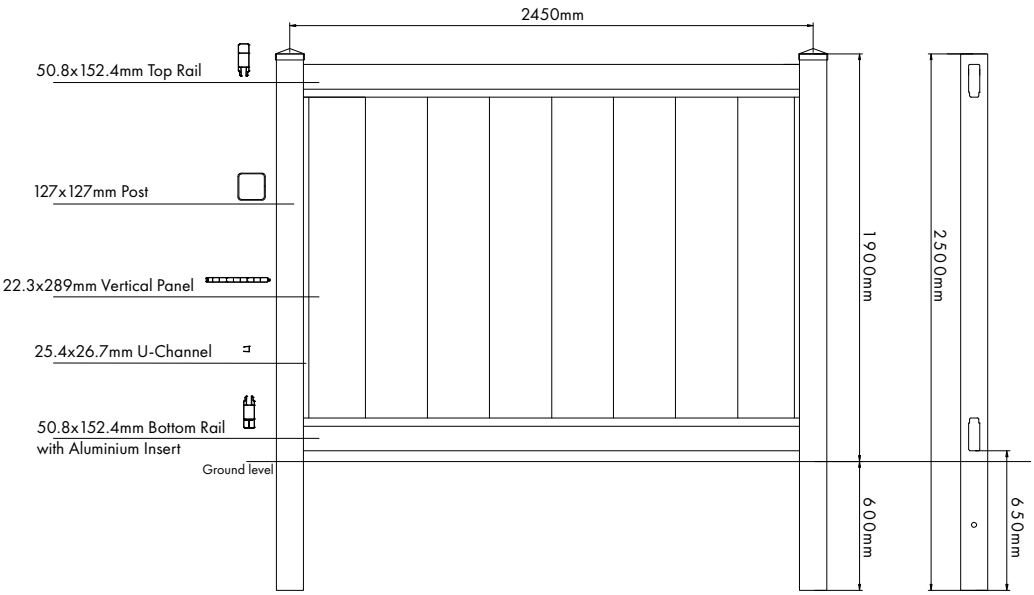

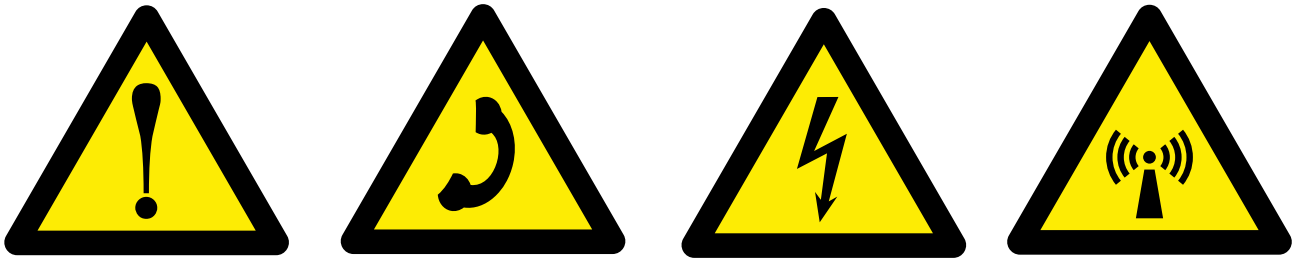

1 Check for any utilities in ground before digging as well as observing property boundaries and council regulations where appropriate.

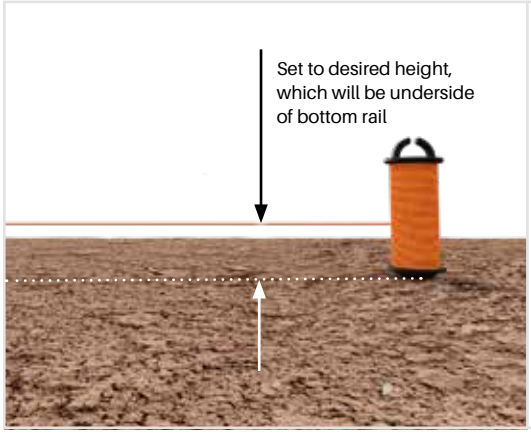

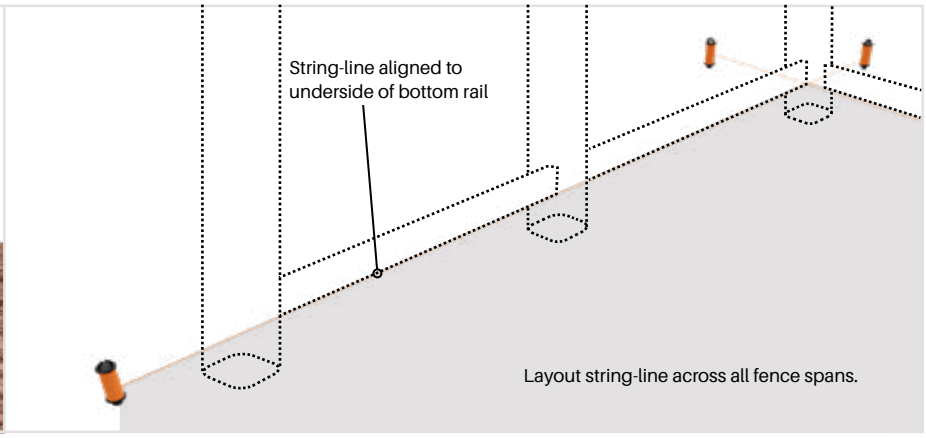

2 Assess layout of fence and set out string line around outside perimeter of fence.
The string must be positioned along the outside perimeter of your posts.
Ensure allowance made for digging post holes and concreting within your property boundaries and to avoid utility lines.
Set the height of the string-line to the desired height of the underside of the bottom fence rail.
A gap under the bottom rail of 50mm is standard, however adjust as needed for each specific install location.

Images & drawings are not to scale

FULL PRIVACY FENCING INSTALL GUIDE

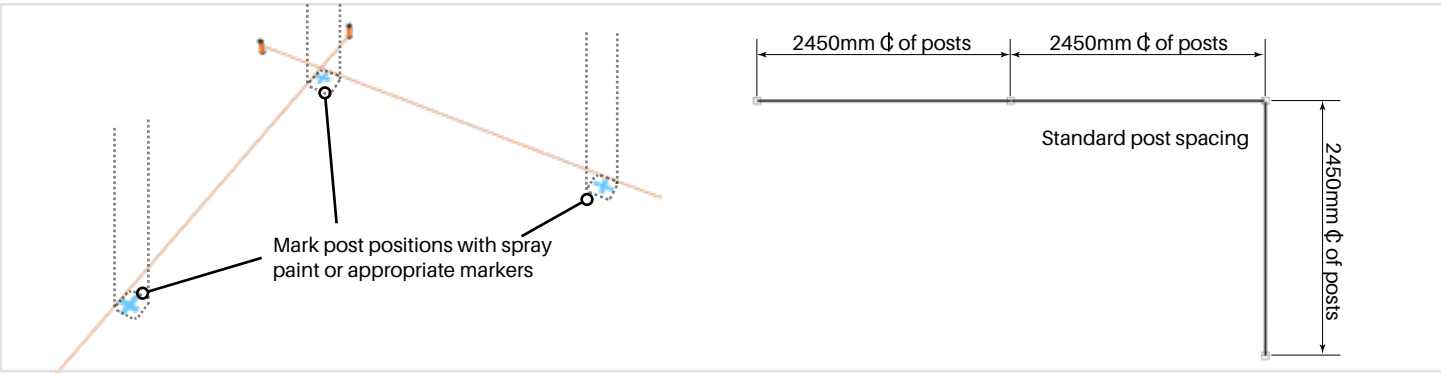

3 Mark post to post centres using appropriate markings such as spray paint or stakes.
Standard fence panel post centres are at 2450mm. If using shorter spans, space posts appropriately.
Posts are 127x127mm square.

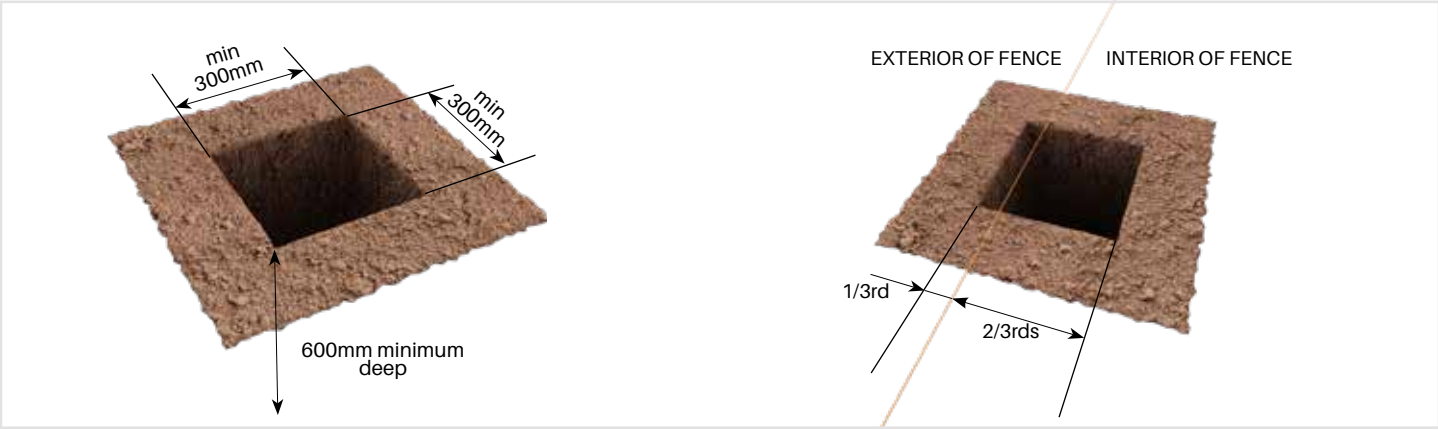

4

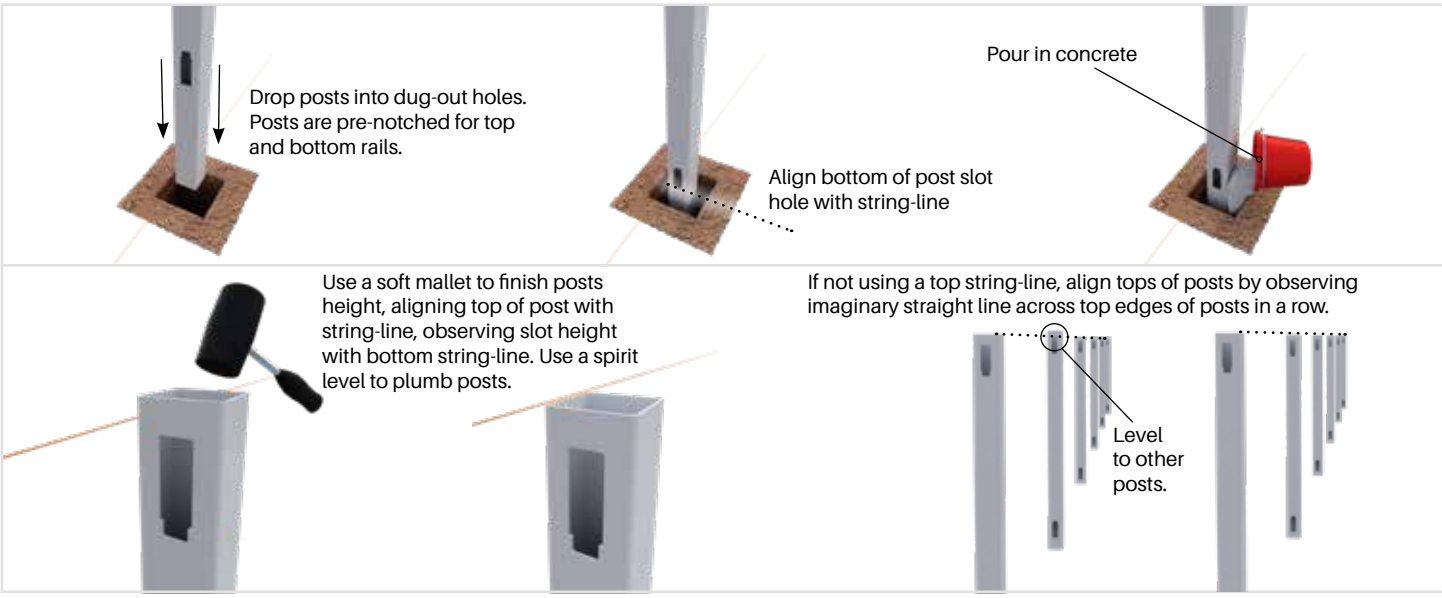

5 For FENCE POSTS:
Set posts into ground ensuring appropriate gap at bottom (refer Step 2). Pour in concrete.
For end posts use 1 way post, for in-line posts use 2 way and for corners use 90° posts.
Use a soft mallet with a wooden block on the top of the fence posts to drive the post into the wet concrete to the desired height, aligning with both top and bottom string lines. If not using top string line, assess height of posts in a line by eye (illustrate).
Check posts plumb using a spirit level and adjust as necessary.
Allow concrete to set before installing panels.

6 For GATE POSTS ONLY:
Gate posts sold with aluminium inserts for rigidity. Use gate posts for both hinge and latch sides of gate.
Pay attention to orientation of slots on post, ensuring rail slots face away from the gate opening.
Plumb using a spirit level and adjust height and angle as necessary before concrete cures.

Images & drawings are not to scale

FULL PRIVACY FENCING INSTALL GUIDE

OPTIONAL EXTRA – ALUMINIUM INTERNAL STIFFENER I-BEAM FOR AREAS REQUIRING WIND LOAD CONSIDERATION

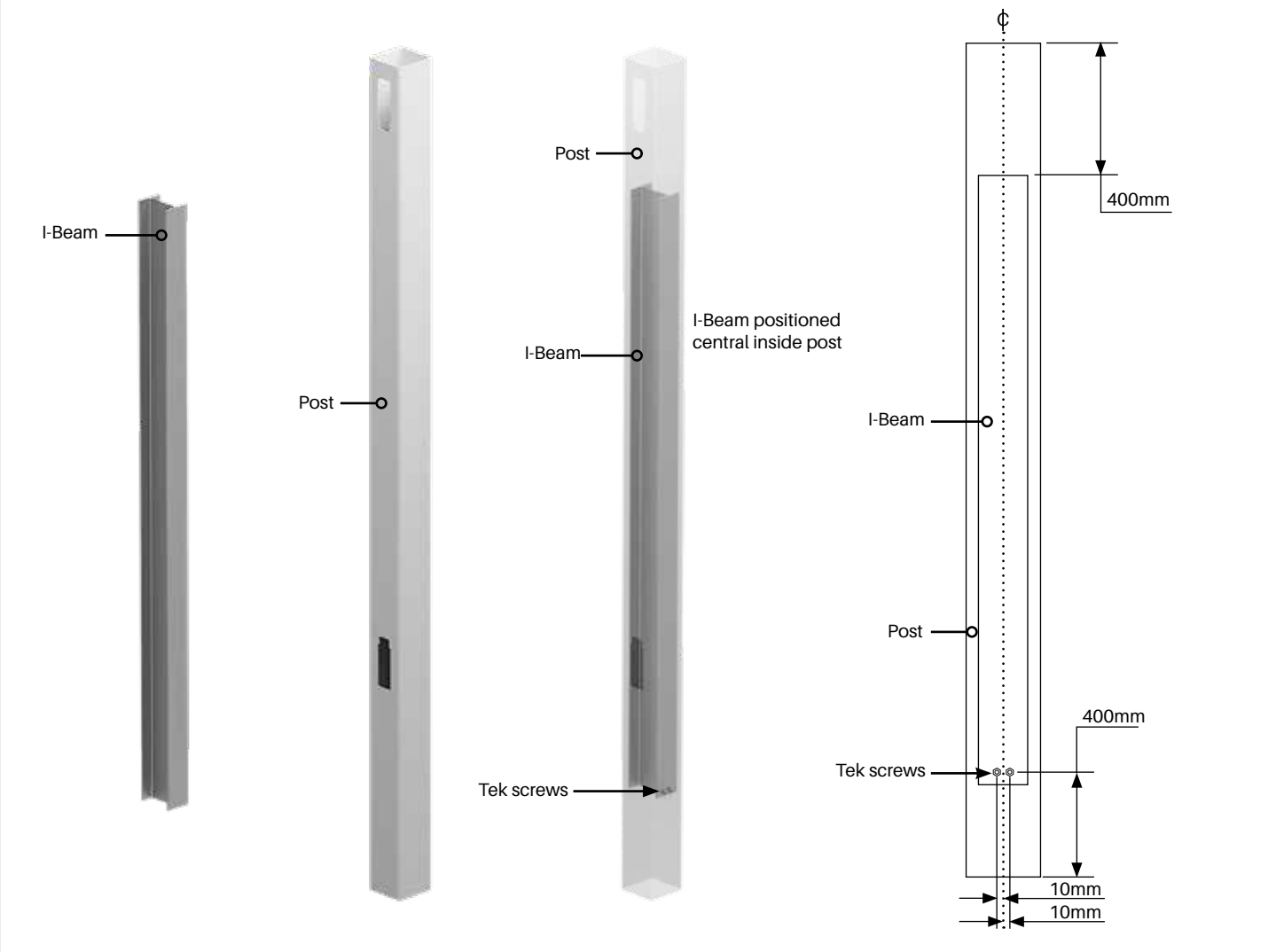

* If wind load consideration is not required, ignore this step.
For a fence panel at 2450 centre to centre and 1800mm high, a post stiffener will allow up to N4/C2 (AS4055 classification).
If stiffener I-Beam installed ensure I-Beam is positioned 400mm down from top of post and remains straight when installed.
Ensure I-Beam does not lean to one side.
Secure stiffener I-Beam to post using 2 x tek screws offset 10mm on either side from centre of post and approx 400mm from bottom of post.
Before screwing off ensure I-Beam is central in post. (consider using internal timber chocks or similar to ensure I-Beam remains centre and straight – chocks and fixing screws not included).
NOTE: 90 degree slotted post cannot be used with Stiffener I-beam. Use 2x offset 1 way posts instead.
GATE POSTS: Gate posts sold with aluminium inserts for rigidity. Use gate posts for both hinge and latch sides of gate.
Pay attention to orientation of slots on post, ensuring rail slots face away from the gate opening.

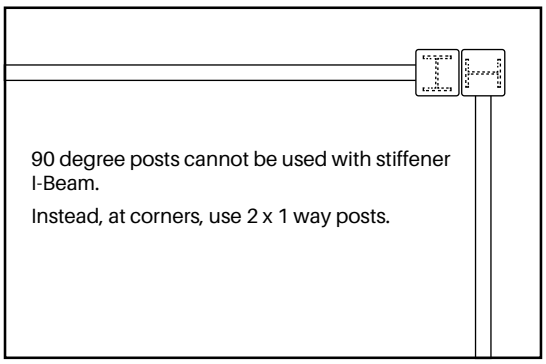

FULL PRIVACY FENCING INSTALL GUIDE

THIS SECTION RELATES TO BASE PLATED POSTS

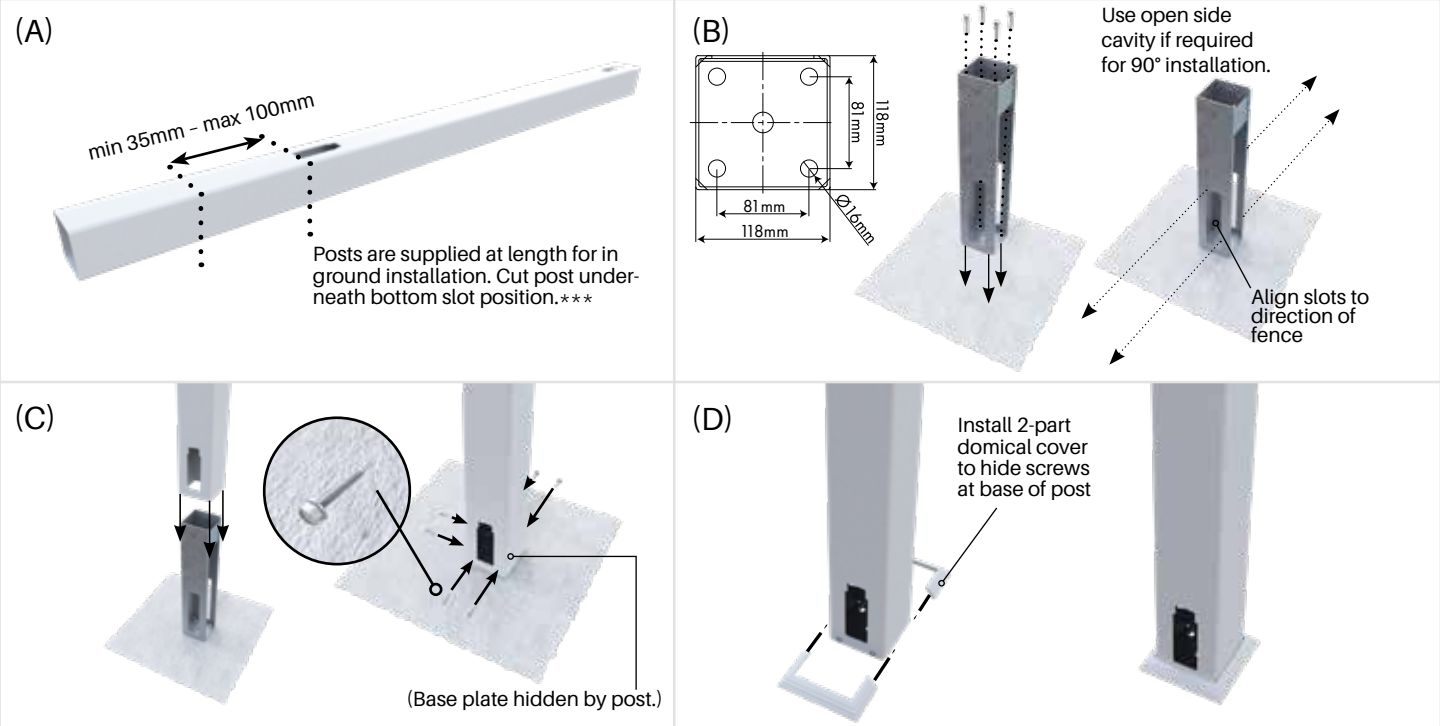

** BASE PLATED POSTS ONLY:
(A) Cut posts to required length – cut post underneath bottom slot position. ***Cut under slot from minimum 35mm up to 100mm maximum. 35mm under the slot hole equates to underside of bottom rail being 35mm from ground level.
(B) Affix base plates to ground using appropriate fixtures (not supplied), 4 x fixings required per base plate. Base plate hole diameters are 16mm. Ensure correct orientation of base plate to line up slots with fence direction.
(C) Slide post over base plate and screw to base plate using appropriate tek screws (not supplied) at approximately 15mm from ground level. Ensure tek screws engage into the base plates. Use 6 screws total, 2 on each side, avoiding the open side cavity of base plate.
(D) Install 2-part domical cover at bottom of post to hide screws.
***Domical cover height is 42mm. If domical cover required, minimum distance under slot must be 45mm.

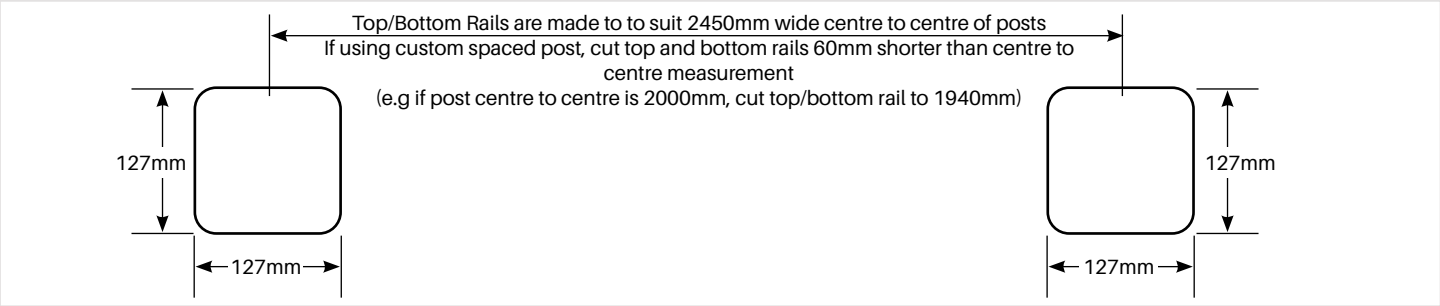

7 Top and bottom rails are supplied suited to 2450mm centre to centre post spacing.
If using custom spacing, top and bottom rails require width adjustment. Measure your installed posts from centre to centre.
The top and bottom rail need to be width adjusted to the centre to centre measurement minus 60mm.
For cutting of top and bottom rail, use a fine tooth blade to reduce chance of chipping (circular saws may leave rough edges).

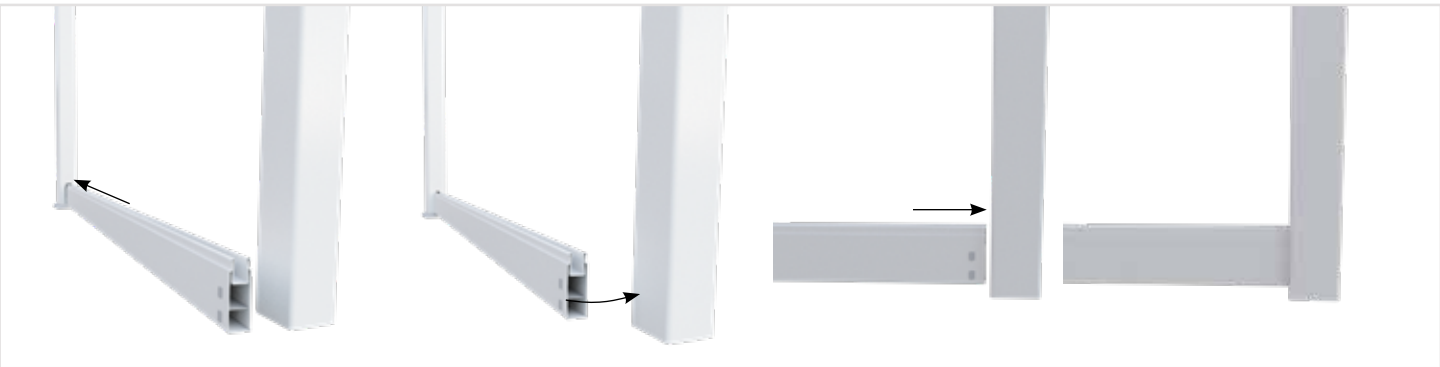

8 Slide bottom rail with aluminium insert into first post as far as possible and lever into adjacent post.
Slide back bottom rail to ensure notches have passed into adjacent post.
The bottom rail should recess into each post approx 33-35mm.

Images & drawings are not to scale

FULL PRIVACY FENCING INSTALL GUIDE

** If using custom length rails, either re-notch using notching tool or secure into position on the inside of rail/inside of post – refer to diagram.

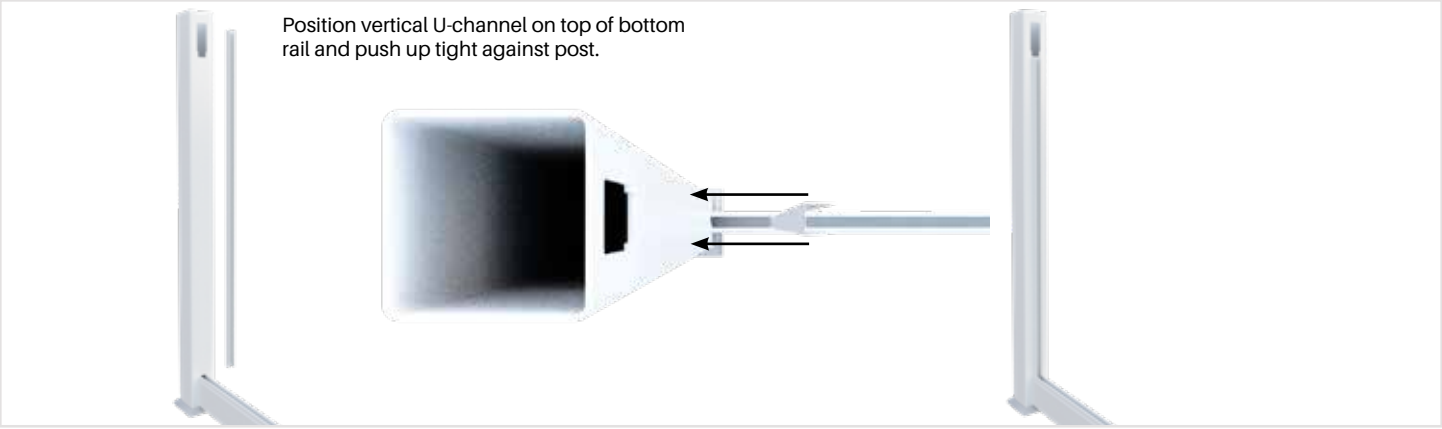

9 Position vertical U-channel on top of bottom rail and push up tight against post. Repeat step on all posts, where fence panels are to be installed.
U channel will be held against post both sides once vertical panels installed (no fixing required).
TIP: put a dab of silicone between post and U-channel rear wall

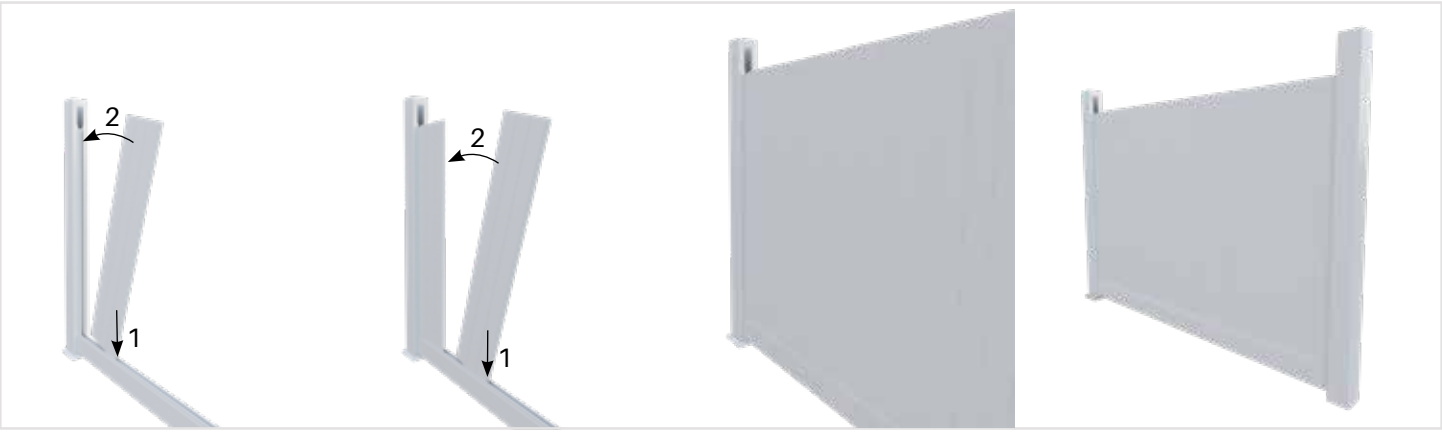

10 Starting at the vertical U channel on one side, insert vertical panels into bottom rail and lever into position. Repeat process towards the next post.
If using a custom length span, the last vertical panel will required cutting to size. Refer next step.

FULL PRIVACY FENCING INSTALL GUIDE

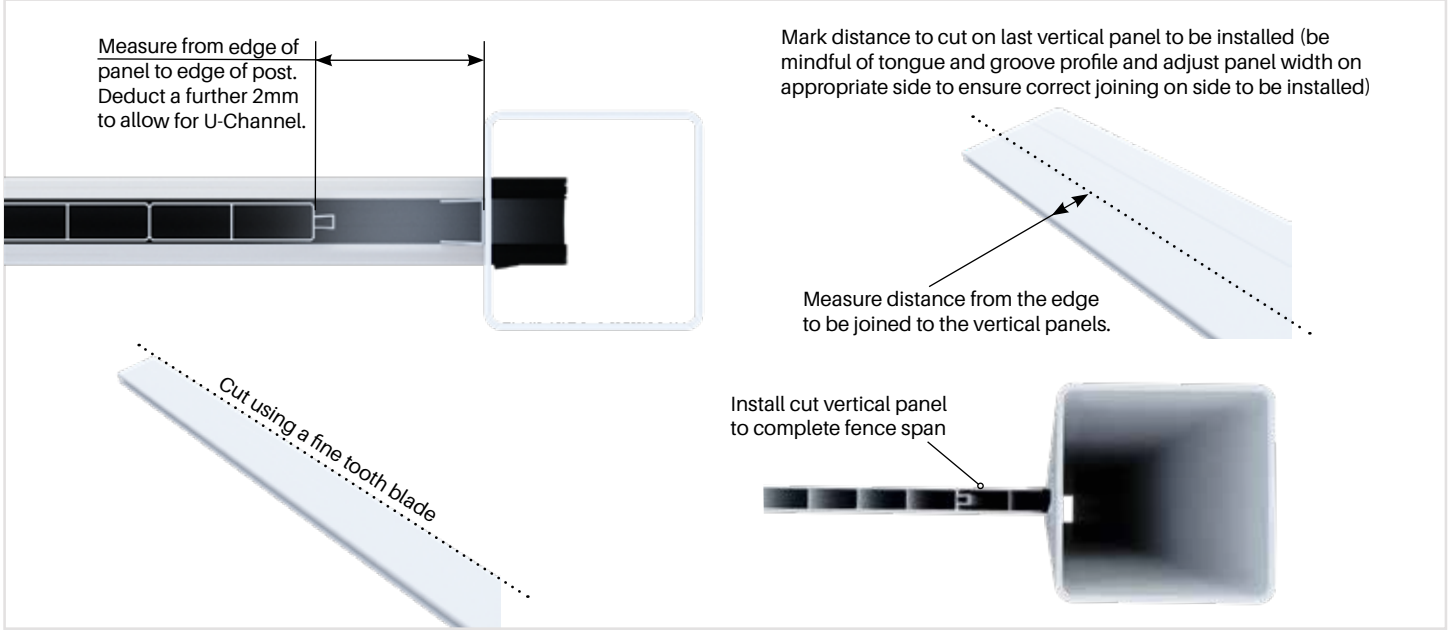

11 The last vertical panel in the span may need cutting to fit. Mark distance to cut on last vertical panel to be installed (be mindful of tongue and groove profile and adjust panel width on appropriate side to ensure correct joining on side to be installed) and cut using a fine tooth blade. Follow manufacturer's instructions for safe use of saw.

12 Install top rail over vertical panels and simultaneously push top rail as far as possible into one post and then slide back into adjacent post.
Standard length top rails are self securing using the pre-notched tongues.
If using custom lengths, re-notch the tongues with notching tool (sold separately) or secure top rail in place on post using appropriate screws.
Note: The top rail should recess into each post approx 33-35mm.

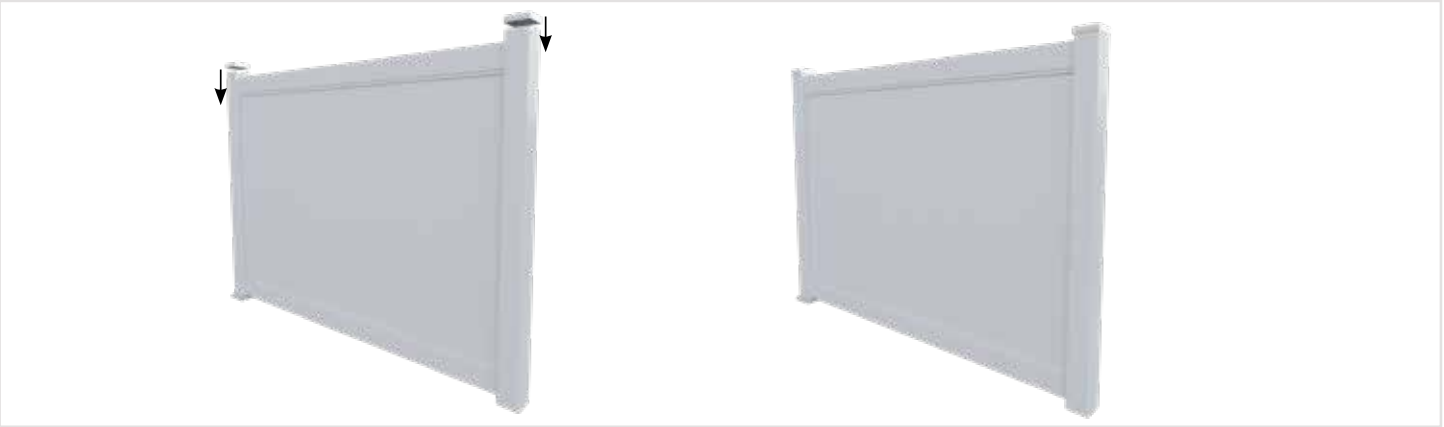

13 Repeat process for remaining posts.
Apply silicone to inner of top caps and press on to each post to finish.

Images & drawings are not to scale

FULL PRIVACY SLIDING GATE

Custom sliding gate

Simply provide sliding gate size requirements and we can cut to size and flat pack a full privacy Hampton's sliding gate featuring a sturdy powder coated aluminium white frame with Hamptons PVC inserts. The innovative design enables pre-powder coated aluminium outer framing to be easily screwed fixed together without need of welding. Huge savings are available with Hamptons Sliding Gates versus traditional manufacture techniques.

- CUT TO SIZE & FLAT PACKED
- READY FOR EASY ASSEMBLY
- MOTORS & ACCESSORIES AVAILABLE
- SENDING AUSTRALIA WIDE

SIMPLE TO FOLLOW PDF ASSEMBLY GUIDE

Instant quoting/pricing

TAKE THE HASSLE OUT OF QUOTING

Simply input the sliding gate dimensions in our easy to use FREE Excel form and get instant pricing.

Contact us and we can email to you.

- INSTANT PRICING
- MICROSOFT EXCEL FORMAT
- EASY TO USE

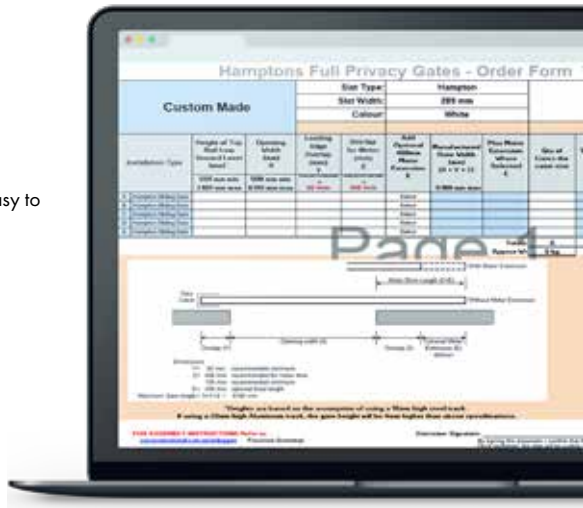

CONTACT US TO GET YOUR COPY OF THE ORDER FORMS

www.glassoutlet.com.au/contact

GUIDE POST & EXTENSION

65x65mm steel post

2700MM LONG

Order Code: **XPSG-2700-ST65-W**

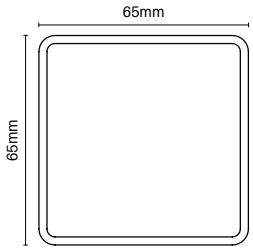

TECH SPECS

- 65x65mm galvanised steel post
- Includes press in black cap
- 2.5mm wall thickness
- Use at gate end to affix guide rollers or slide guide
- May also be used at gate front for affixing U or F catch

Finish

WHITE
(W)

Sliding gate extension

400MM LONG

Order Code: **XPSG-MXTN-KIT-W**

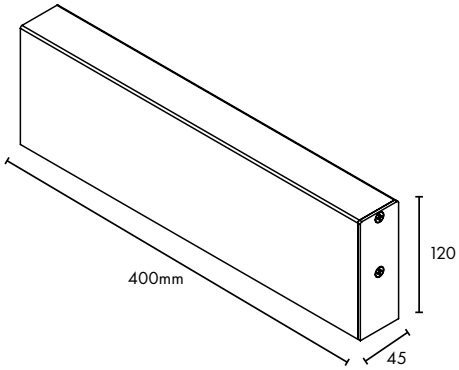

TECH SPECS

- 400mm long bottom rail extension
- Optional extra – useful where extra length required for motor rack to be affixed to bottom rail.
- Not required for every slide gate install. Recommended only where install situation requires
- Extension piece fixes to gate side frame
- Fixing bolts and plates included in kit

Finish

WHITE
(W)

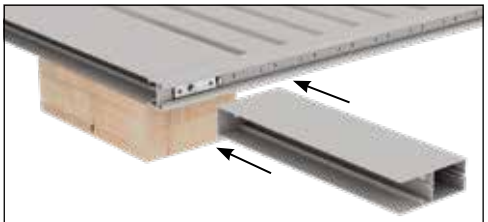

400mm extension easily bolts onto gate side frame

Gate U catch

Order Code:**XPSG-CATCH-U**

- Suits up to 50mm gate frames
- Gate catch supplied with 5 pre-drilled holes for easy installation and adjustment
- Rubber stop provided for noise reduction
- Steel zinc plated

Gate F catch

Order Code:**XPSG-CATCH-F**

- Suits up to 50mm gate frames
- Affix bracket to wall/post via "F" leg
- U catch attaches to F section – includes rubber stop for noise reduction
- U catch horizontally adjustable for ease of lining up to gate frame
- Steel zinc plated

Gate stop

Order Code:**XPSG-STOP**

- Stops the gate in the option position
- Forged steel zinc plated gate stop with nylon bumper
- Bolts to concrete at end of gate track. 4x Ø11mm fixing holes
- Made in Italy

Images & drawings are not to scale

SLIDING GATE ACCESSORIES

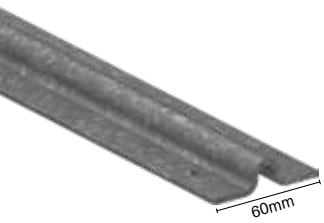

Steel sliding gate track

3000MM LONG OR
6000MM LONG

Order Codes:
XPSG-3000-TRACK-ST (3000mm)
XPSG-6000-TRACK-ST (6000mm)

- Available 3000mm or 6000mm long
- Made from 3mm galvanised steel for durability
- Bolt down sliding gate track with a Ø20mm running surface
- Easy to install with predrilled fixing holes (22 holes for 3000mm track and 42 holes for 6000mm track)

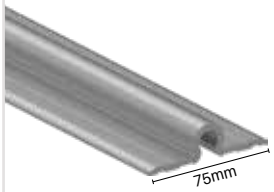

Aluminium sliding gate track

6000MM LONG

Order Code:
XPSG-6000-TRACK-AL (6000mm)

- Available 6000mm long
- Mill finish aluminium – 6063-T5
- Bolt down sliding gate track with a Ø20mm running surface
- No drill holes – drill fixing holes as needed

Sliding gate track pins

Order Code: **XPSG-ANCHOR**

- Mushroom head galvanised steel track anchor pins
- 6.5mm x 38mm
- Pre-expanded expansion anchor. Once hammered in, unique kinked shaft provides a spring action for vibration proof anchoring. Use 6.5mm masonry bit into concrete

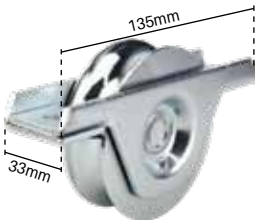

Sliding gate wheel

Order Code: **XPSG-WHEEL**

- 80mm diameter with 20mm diameter groove
- Zinc plated steel
- Load rating 180kg
- Use with 1 x XPSG-WHEEL-CS clamping set to fix to sliding gate bottom rail
- Made in Italy

Sliding gate wheel clamping set

Order Code: **XPSG-WHEEL-CS**

- Use to clamp sliding gate wheel to bottom rail
- Aluminium M8 threaded block
- Includes 2 x zinc plated screws
- Sold as a pack of 2 (suits 1 x wheel)

Slide guide

Order Code:**XPSG-GUIDE**

- Self-adjusting slide guide attaches to sliding gate top rail
- Keeps gate in vertical position and travelling true while opening/closing
- As gate travels along track and shifts up or down, slide guide adjusts automatically. Up to 280mm vertical adjustment.
- Guide channel is anodised black with sturdy nylon block

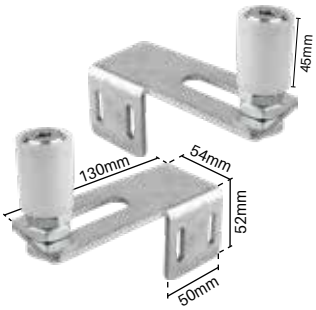

Sliding gate guide rollers

2 PACK

Order Code: **XPSG-TOPROLL-2PK**

- Alternative to SlideGuide
- Rollers guide top rail while gate opens and closes
- Can only be used if vertical deviation of gate while travelling is 15mm or less
- White nylon rollers – made in Italy
- Kit includes 1 x left and 1 x right zinc plated steel mounting bracket (fixings not included) – 30mm hole centers

2 installation methods —

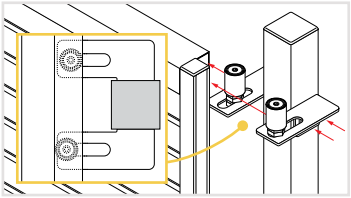

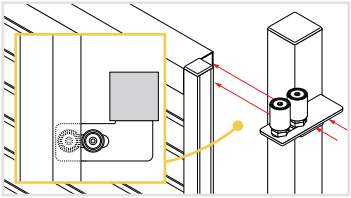

Images & drawings are not to scale

glass outlet

Sliding gate motors

Your Smart Nice Home

LONG TERM RELIABILITY

NiceHome automation and accessories are tested every day in the Nice laboratories according to strict criteria. To ensure compliance with the strictest safety requirements on the market, NiceHome guarantees the highest possible technological and quality standards.

PROFESSIONAL QUALITY

Designed and manufactured in Italy, NiceHome automation benefits from unique Italian know-how combining top performance with an essential style to adapt perfectly to the needs of your home.

To complement Hamptons sliding gates, Glass Outlet can supply the highest quality Italian made gate automation and accessories. NiceHome automation is a new upgrade to the well-known Mhouse range.

Filo 400 Pro Kit

Order Code:**XPSG-FILO-400**

KIT INCLUDES:
- 1x Motor
- 2x Remotes
- 1x Pair of Photocells (safety device which prevents the gate from closing on pedestrians or vehicles)

- Sliding gate opener suits gates up to 6000mm wide and weighing up to 400kg
- Easy to install and simple programming steps
- Flexible short power cord pre-wired to motor
- Plugs into standard power point with 10 amp flat 3 pin plug
- Includes pinion (cog) that integrates with rack on gate

Low voltage cable option

External transformer

FILO 400 Pro Kit with split pack

Features external transformer

Order Code:**XPSG-FILO-400PRO-SP**

- Same motor and accessories as FILO 400 except transformer is separated from motor
- External transformer converts 240V mains power to low voltage 24V
- Use 2 core x 2.5mm (double insulated) electrical cable to run from transformer to motor. CABLE SOLD SEPARATELY – can be purchased from electrical wholesaler or reputable hardware store
- Motor can installed a maximum of 50 meters away from transformer 10 amp flat 3 pin plug
- Ideal where getting 240V mains power to gate motor is different. Simply run low voltage cable from transformer to gate motor.
- Refer www.easygate.com.au for technical assistance/manuals

KIT INCLUDES:
- 1x Motor
- 2x Remotes
- 1x Pair of Photocells (safety device which prevents the gate from closing on pedestrians or vehicles)
- 1x External transformer in weatherproof enclosure

Images & drawings are not to scale

MOTOR ACCESSORIES

Remote control

Order Code:**XPSG-FILO-REMOTE**

- Optional extra remote control to replace remotes in kit if broken or more remotes required (2x remotes included as standard with each motor kit)
- 5 channel remote able to control various gate functions (eg open only, close only, partial open etc)

Wireless keypad

Order Code:**XPSG-FILO-WKP**

- Optional wireless keypad for gate motor opening/closing
- PIN number control access
- Easy to affix to wall or post
- Runs on 2 x CR2430 lithium batteries

Solar power kit

Order Code:**XPSG-FILO-SOLAR**

- Solar power system designed for use with NiceHome motors
- System uses exclusively solar power to run automation without use of electrical mains power
- Provides continues electrical energy. Ideal for sites where mains power is unavailable
- Includes photovoltaic panel (converts solar energy into electrical energy) and electric battery (for stored power, able to operate gate night and day)
- Attention must be paid to ensure panel positioned to receive full sunshine

Backup battery

Order Code:**XPSG-FILO-BATTERY**

- Optional battery provides backup power in the event of mains power failure
- Gate can be cycled multiple times under battery power (no. of cycles may vary due to gate size and site conditions)
- Backup battery is recharged under mains power

Rack

Order Code:**XPSG-FILO-RACK**

- Tough & durable nylon rack (with steel core)
- Affix to bottom rail of sliding gate
- 1 meter long sections; 6 fixing points
- Quieter than steel racks
- Made in Italy

TECHNICAL ASSISTANCE/MANUALS AND SUPPORT VIDEOS

www.easygate.com.au

Images & drawings are not to scale

FULL PRIVACY PEDESTRIAN GATE

CUSTOM MADE

Custom pedestrian gate

Simply provide width and height requirements and we can custom cut and flat pack a full privacy pedestrian gate featuring a sturdy aluminium outer frame with PVC Hampton inserts. Easy to assemble. To complete, use D&D white hinges & latch.

- CUSTOM CUT TO SIZE & FLAT PACKED
- EASY TO ASSEMBLE
- SENDING AUSTRALIA WIDE

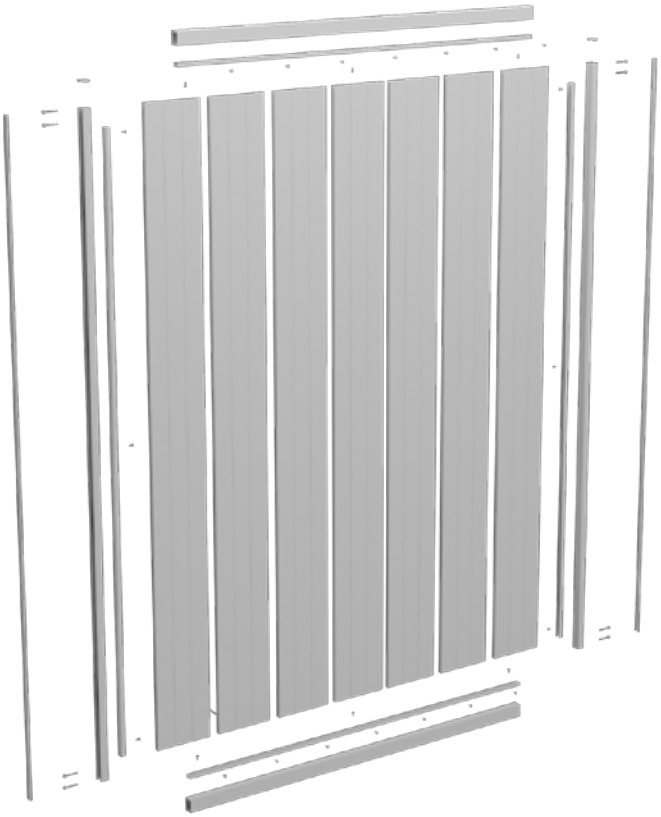

NOTE: Refer Pg85-88 for hinge & latching options

Instant quoting/pricing

TAKE THE HASSLE OUT OF QUOTING

Simply input pedestrian gate dimensions in our easy to use FREE Excel form and get instant pricing.

Contact us and we can email to you.

- INSTANT PRICING
- MICROSOFT EXCEL FORMAT
- EASY TO USE

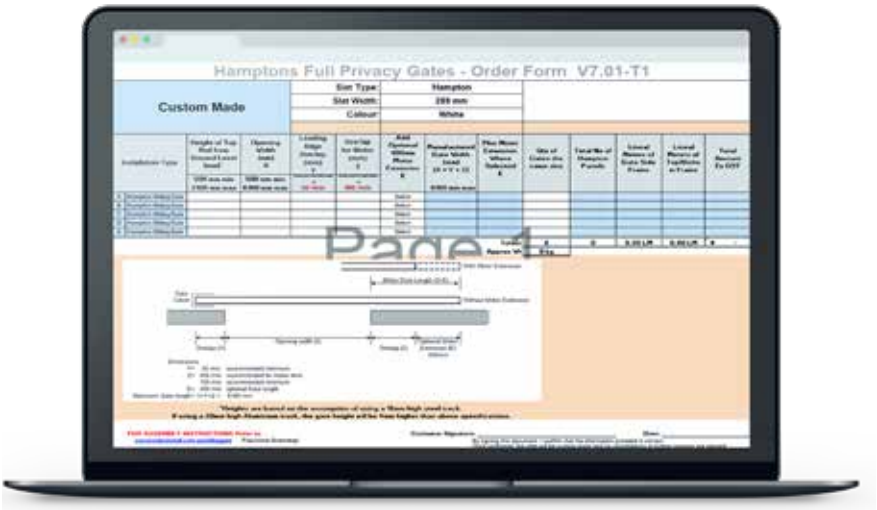

CONTACT US TO GET YOUR COPY OF THE ORDER FORMS

www.glassoutlet.com.au/contact

Images & drawings are not to scale

COMBO FENCING

glass outlet

COMBO FENCING

COMBO Privacy + Topper panel kit

2388MM WIDE
1800MM HIGH

Order Code: **HF-COMBO-PANEL**

- Flat pack kit in a box – easy assembly
- White UV stabilised PVC with protective titanium dioxide additives
- Panels have stylish shiplap grooves, are tongue & groove and slot neatly into each other
- Panel top finished with stylish 76mm wide vertical slats

TECH SPECS

- Bottom & Mid Rails: 2388mmW x 152mmH x 50.8mmD; 2.3mm wall thickness
- Top Rail: 2388mmW x 89mmH x 50.8mmD; 2.8mm wall thickness
- Bottom rail includes aluminium insert for extra rigidity
- Full Privacy Panels: 1215mmH x 289mmW x 22mmD; 1.3mm wall thickness
- Vertical Slats: 330mmH x 76mmW x 22mmD; 2mm wall thickness: 73m gap spacing
- Achieves overall panel height of 1800mm
- Panel and rails can be easily cut in width and height

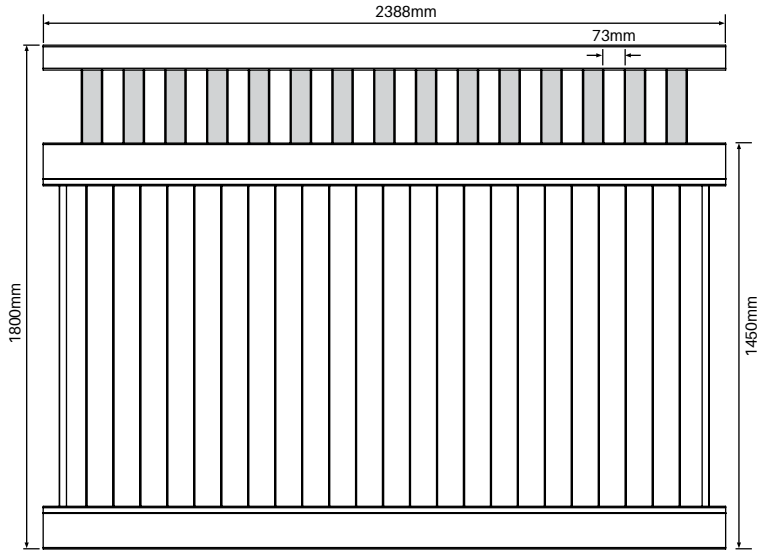

KIT INCLUSIONS

- 1x slotted top rail (2388mm W)
- 1x slotted mid rail (2388mm W)
- 1x bottom rail (2388mm W) w/ aluminium insert
- 8x full privacy panels (1215mm H x 289mm W)
- 2x end U channels (1145mm H)
- 15x vertical slats (330mm H x 76mm W)

COMBO Privacy + Topper gate

1000MM WIDE
1800MM HIGH

Order Code: **HF-COMBO-GATE**

- Fully assembled gate including 2 x flat top caps
- White UV stabilised PVC with protective titanium dioxide additives
- Combination of full privacy panels and 78mm white vertical slats with 69mm spacing

TECH SPECS

- Bottom rail includes aluminium insert for extra rigidity
- Vertical side posts/rails are 1850mmH x 102mmW x 63mmD; 3mm wall thickness
- Distance between top & bottom rail is 1800mm
- Gate full privacy panels and slat toppers align with panels to give seamless finish
- Includes 4 x aluminium internal inserts for rigidity (refer cross hatch area in drawing). Install hinges & latch in these areas for maximum fixing strength
- Gate cannot be width or height adjusted

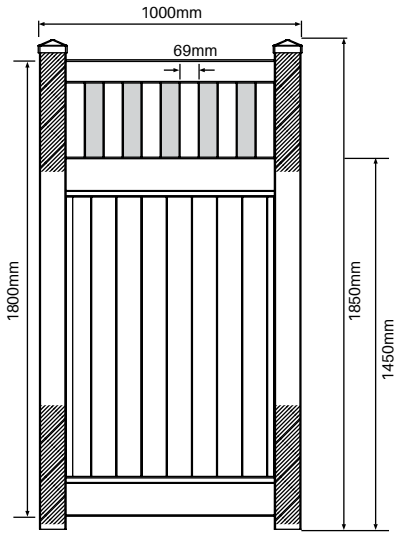

FULLY ASSEMBLED GATE
NO ASSEMBLY REQUIRED

Images & drawings are not to scale

COMBO FENCING

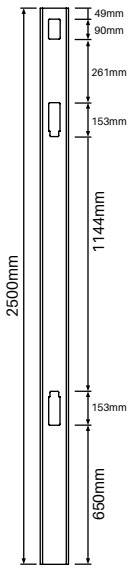

127MM X 127MM

1 way post – Combo

2500MM LONG

Order Code: **HF-COMBO-2500-1W**

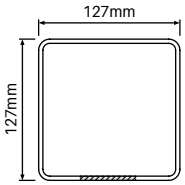

SLOTTED 1 SIDE ONLY

TECH SPECS

- 2500mmH x 127mmW x 127mmD; 3.8mm wall thickness
- White UV stabilised PVC with protective titanium dioxide additives
- 153mmH x 52mmW slotted holes for panel top/midrail/bottom rail insertion
- Use as start or finish post.
- Top cap sold separately
- Not suitable for hinging or latching a gate. Use gate post for that application (Code: HF-COMBO-2500-1WGP)

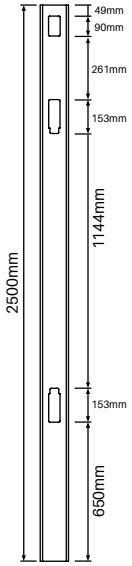

127MM X 127MM

2 way post – Combo

2500MM LONG

Order Code: **HF-COMBO-2500-2W**

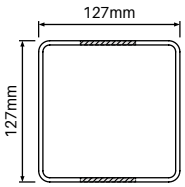

SLOTTED BOTH SIDES

TECH SPECS

- 2500mmH x 127mmW x 127mmD; 3.8mm wall thickness
- White UV stabilised PVC with protective titanium dioxide additives
- 153mm high x 52mm wide slotted holes both sides of post for panel top/midrail/bottom rail insertion
- Use as inline post for straight fencing run
- Top cap sold separately

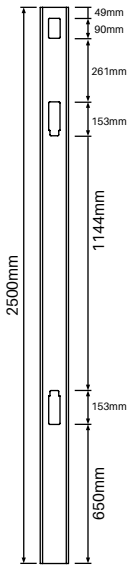

127MM X 127MM

90° post – Combo

2500MM LONG

Order Code: **HF-COMBO-2500-90**

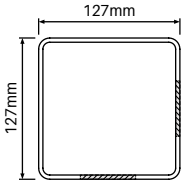

SLOTTED 2 SIDES AT 90⁰

TECH SPECS

- 2500mmH x 127mmW x 127mmD; 3.8mm wall thickness
- White UV stabilised PVC with protective titanium dioxide additives
- 153mmH x 52mmW slotted holes on adjacent sides for panel top/midrail/bottom rail insertion
- Use at 90 degree corner
- Top cap sold separately

Images & drawings are not to scale

COMBO FENCING

127MM X 127MM

Full post 'No slot holes ' – Combo

2500MM LONG

Order Code: **HF-FULLP-2500-FP**

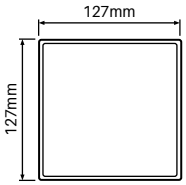

TECH SPECS

- 2500mmH x 127mmW x 127mmD; 3.8mm wall thickness
- White UV stabilised PVC with protective titanium dioxide additives
- No slot holes – cut slot holes wherever needed
- Use hole cutting jig (code: HF-COMBO-JIG) to assist routing holes if required
- Useful for panels with sloping ground for stepping panels
- Ideal for height adjusted panels where slot hole positions are different to standard posts with pre-routed holes
- Brackets may also be affixed to post for holding panel top/midrail/botom rails (code: HF-COMBO-WB-3PK) – an alternative to routing slot holes

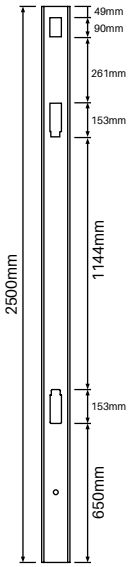

127MM X 127MM

1 way gate post – Combo

2500MM LONG

Order Code: **HF-COMBO-2500-1WGP**

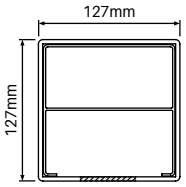

SLOTTED 1 SIDE
INCLUDES ALUMINIUM INSERT

TECH SPECS

- 2500mmH x 127mmW x 127mmD; 3.8mm wall thickness
- White UV stabilised PVC with protective titanium dioxide additives
- 3 x slotted holes on one side of post to suit incoming panel
- Use as hinge post or latch post
- Includes internal 2mm thick aluminium insert entire length of post (ie 2500mm long). Provides post rigidity and also, sturdy substrate for fixing of hinges or latch
- Top cap sold separately

HEAVY DUTY

Concealed base plate

620MM HIGH

Order Code: **HF-FULLP-BP**

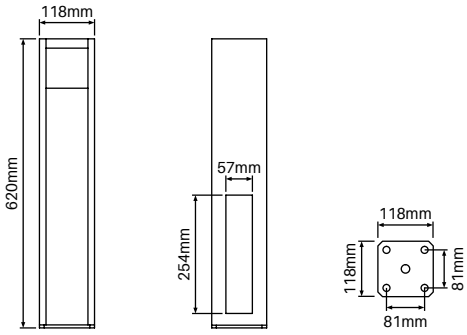

TECH SPECS

- Internal fitting base plate suits 1 way, 2 way and 90 degree posts. Not suitable for use with 1 way 'gate' post
- 6mm thick base plate with 2mm thick vertical walls
- Cold-galvanized steel provides strong corrosion resistance
- 4 x fixing holes in base plate
- Post sleeves over base plate and fixes to internal base plate with tek screws. Use 2 part domical cover to hide screw fixings.
- Base plate system not suitable for use where wind load considerations required
- **Refer install guide on page 37** for fitting information

Images & drawings are not to scale

COMBO FENCING

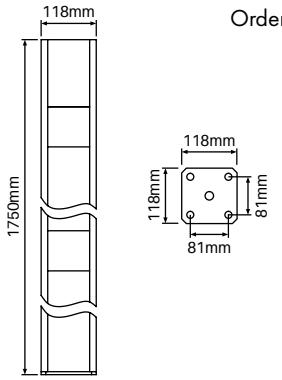

HEAVY DUTY

Concealed base plate

1750MM HIGH

Order Code: **HF-FULLP-BP-1750**

TECH SPECS

- Internal fitting base plate suits 1 way post.
- Enables base plate fitting of 1 way post for use as a hinge and/or latch post
- 6mm thick base plate with 2mm thick vertical walls.
- 1750mm high vertical walls provide post rigidity also, sturdy substrate for fixing of hinges and/or latch
- Cold-galvanized steel provides strong corrosion resistance
- 4 x fixing holes in base plate
- Post sleeves over base plate and fixes to internal base plate with tek screws. Use 2 part domical cover to hide screw fixings
- Base plate system not suitable for use where wind load considerations required

I beam

Order Code: **HF-FULLP-BEAM-1800**

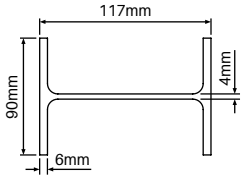

TECH SPECS

- 1800mmH I beam stiffener
- Aluminium Alloy 6063 T5; mill finish
- Fits inside 1 way or 2 way posts. Cannot be used with 90 degree post or gate post
- Use where wind load is a consideration. Post stiffener will allow up to N4/C2 (AS4055 classification)
- **Refer install guide on page 36**

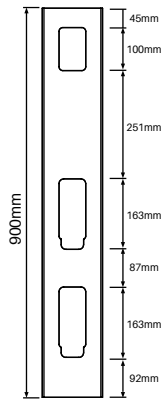

Hole cutting jig

Order Code: **HF-COMBO-JIG**

TECH SPECS

- Made from SS304
- Jig provides slot hole required in 127x127mm posts to suit panel bottom/mid rail and also, top rail
- New post slot holes may be required if stepping panels for sloping ground or if panels are height adjusted requiring change of distance between standard post slot holes
- Route hole prior to post installation
- Jig suits use with 6.35mm 1/4" trimmer with 16mm diameter guide (eg Makita DRT50ZJX2 trimmer)

Images & drawings are not to scale

glass outlet

COMBO FENCING

Wall/post brackets

3 PACK

Order Code: **HF-COMBO-WB-3PK**

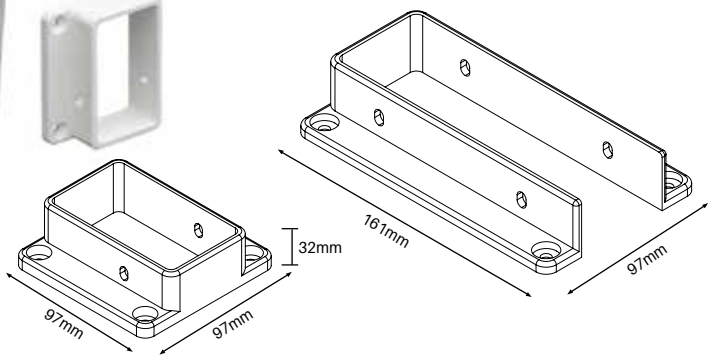

TECH SPECS

- 3 pack of brackets
- Affix to existing post or wall to start or end run of full privacy fencing
- Includes 10x screws for fixing off bracket to bottom/mid & top rails + 12x cover caps to hide screws
- White UV stabilised PVC with protective titanium dioxide additives
- Fixings for screwing brackets to post or wall not supplied

Hamptons fencing tool

Order Code: **HF-TOOL**

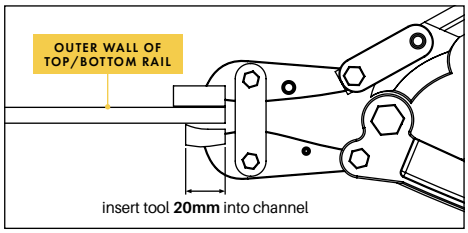

TECH SPECS

- Tool creates a protruding flap/tag at the end of the horizontal top & bottom rail which prevents the rail pulling out from slots in posts
- Specially designed tooling in jaw creates the protruding flap/tag

HOW TO USE

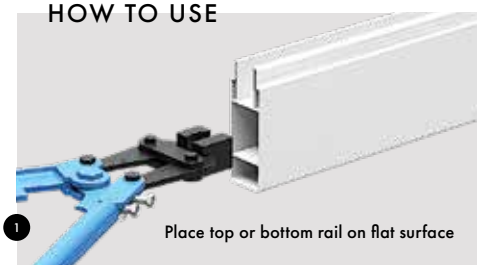

1 Place top or bottom rail on flat surface

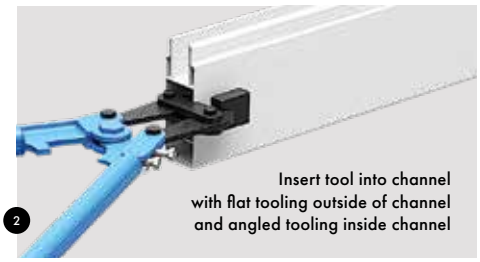

2 Insert tool into channel with flat tooling outside of channel and angled tooling inside channel

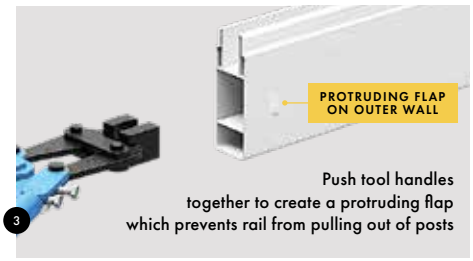

3 Push tool handles together to create a protruding flap which prevents rail from pulling out of posts

Post plugs

4 PACK

White finish

Order code: **SS-POSTPLUG-4PK-W**

- Ø32mm outer top suits 25mm hole
- Ideal for covering hole in post when affixing post to wall with inner fixing
- Suits post wall thickness 1.5mm – 3.2mm

1 Drill a 25mm diameter hole through front wall of post

2 Drill rear wall of post with required diameter for fixing and then fix post to wall. Insert appropriate fixing into the wall for affixing post

4 Repeat the process as required

**Black plug shown in imagery above. Plugs supplied are white.*

Self drilling tek screws

12Gx20mm – BAG OF 100

Order Code: **SS-TS-100-B (Black)**
SS-TS-100-W (White)

- Self drilling tek screw featuring integrated thread and drill/cutting tip
- 12G x 20mm tek screw with hex head
- Packed in convenient bags of 100 screws

Images & drawings are not to scale

COMBO FENCING

2 part domical cover

Order Code: **HF-FULLP-DC**

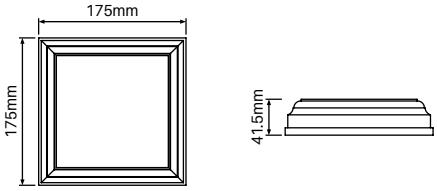

TECH SPECS

- 2 part domical cover – suits 127x127mm post
- Can be fitted after post and panels installed. 2 parts neatly clip together
- White UV stabilised PVC with protective titanium dioxide additives
- Provides a stylish post finish

English style cap

Order Code: **HF-FULLP-EC**

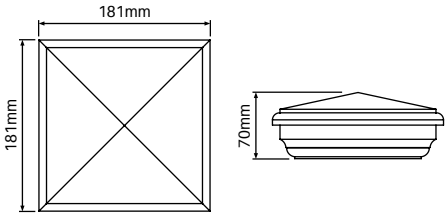

TECH SPECS

- Press on external fit cap
- 'English' style cap with tapered top provides a decorative finish
- White UV stabilised PVC with protective titanium dioxide additives
- Use silicone for long term binding

Slimline tapered cap

Order Code: **HF-FULLP-STC**

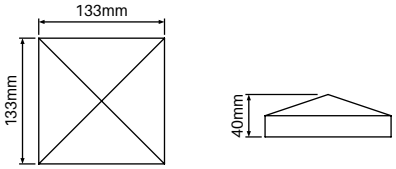

TECH SPECS

- Press on external fit cap
- Slimline tapered cap for minimalist post finishing
- White UV stabilised PVC with protective titanium dioxide additives
- Use silicone for long term binding

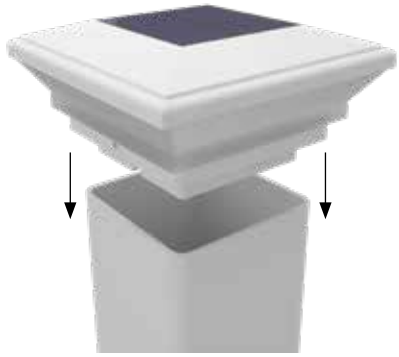

Solar post light

Order Code: **HF-SOLAR-127**

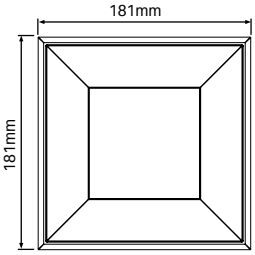

TECH SPECS

- Use solar light instead of standard cap for top 127mmx127mm square posts
- Suits 1 way, 2 way, 90 degree, full and gate posts
- Light automatically turns on when no light source detected. With full charge, light stays on continuously for approx. 8 hours
- Internal replaceable battery lasts approx. 1.5 years. Easy to replace. (2 x Ni-MH AA 1.2V batteries)

** Refer www.productinstall.com.au/hamptons (password: hamptons1) for guidance on install of solar light and replacement of batteries.*

glass outlet

COMBO FENCING INSTALL GUIDE

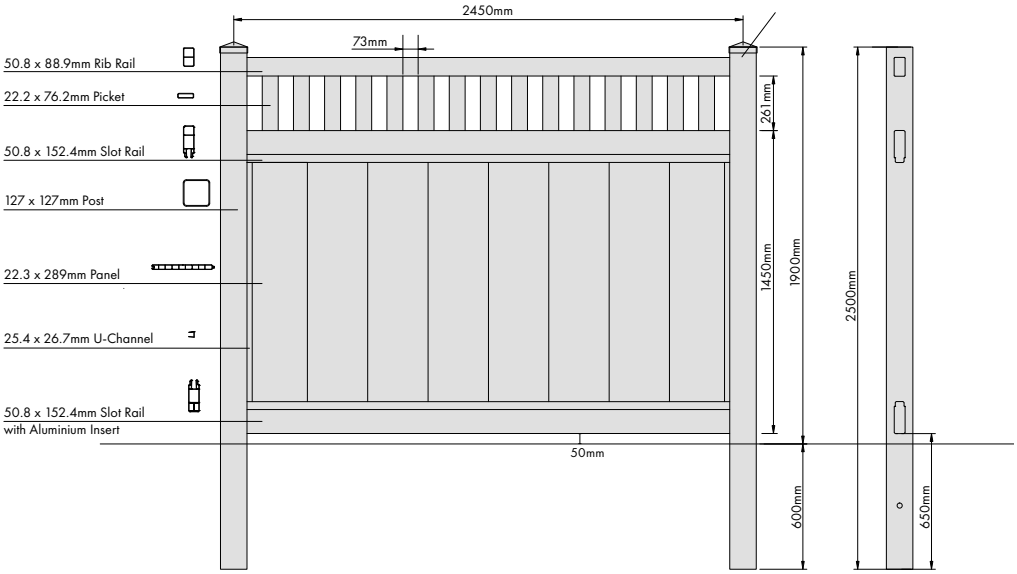

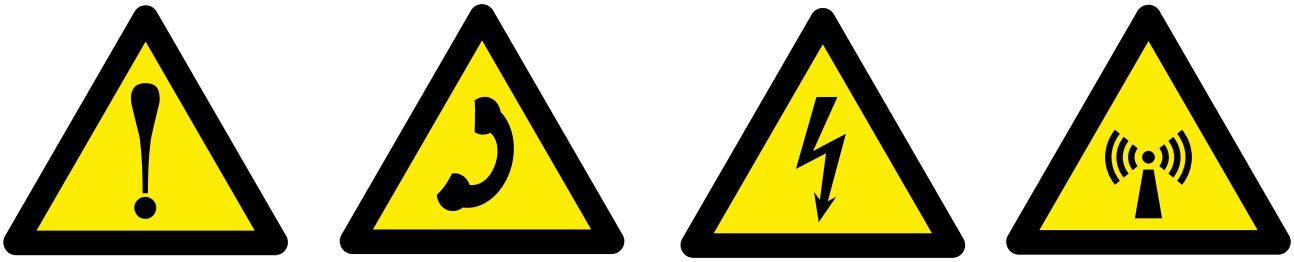

1 Check for any utilities in ground before digging as well as observing property boundaries and council regulations where appropriate.

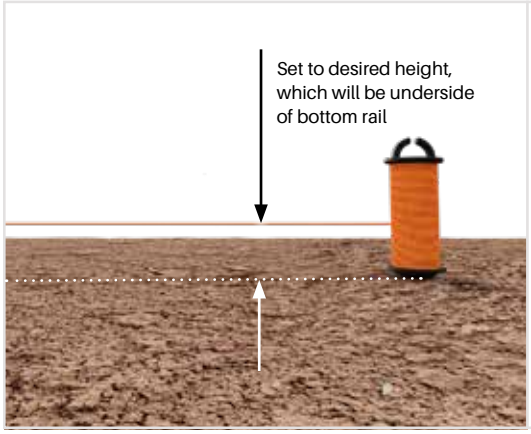

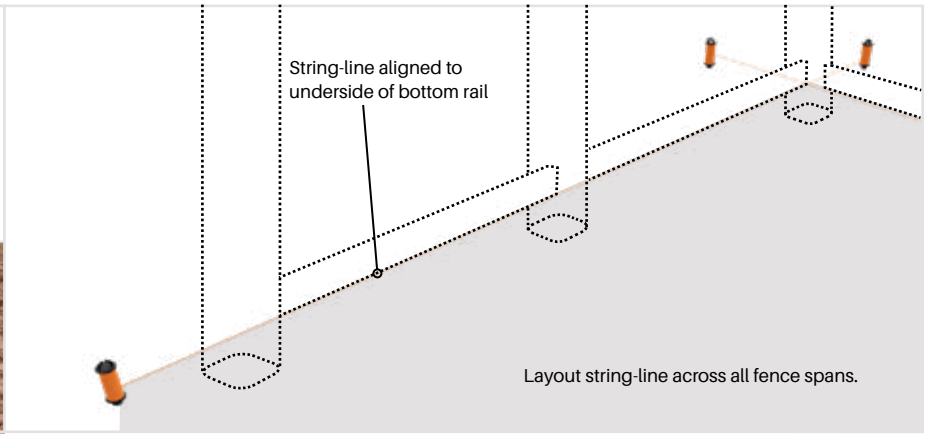

2 Assess layout of fence and set out string line around outside perimeter of fence.
The string must be positioned along the outside perimeter of your posts.
Ensure allowance made for digging post holes and concreting within your property boundaries and to avoid utility lines.
Set the height of the string-line to the desired height of the underside of the bottom fence rail.
A gap under the bottom rail of 50mm is standard, however adjust as needed for each specific install location.

Images & drawings are not to scale

COMBO FENCING INSTALL GUIDE

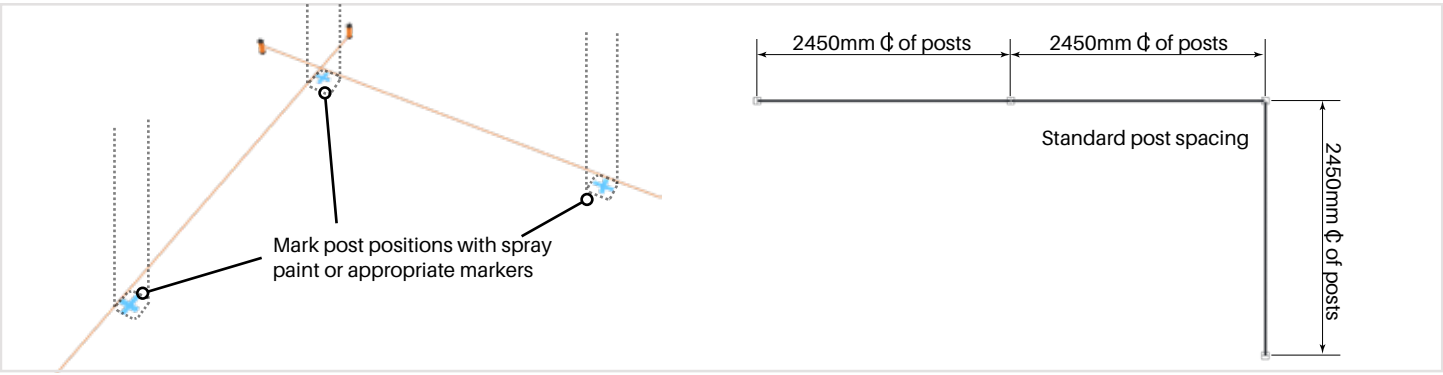

3 Mark post to post centres using appropriate markings such as spray paint or stakes.
Standard fence panel post centres are at 2450mm. If using shorter spans, space posts appropriately.
Posts are 127x127mm square.

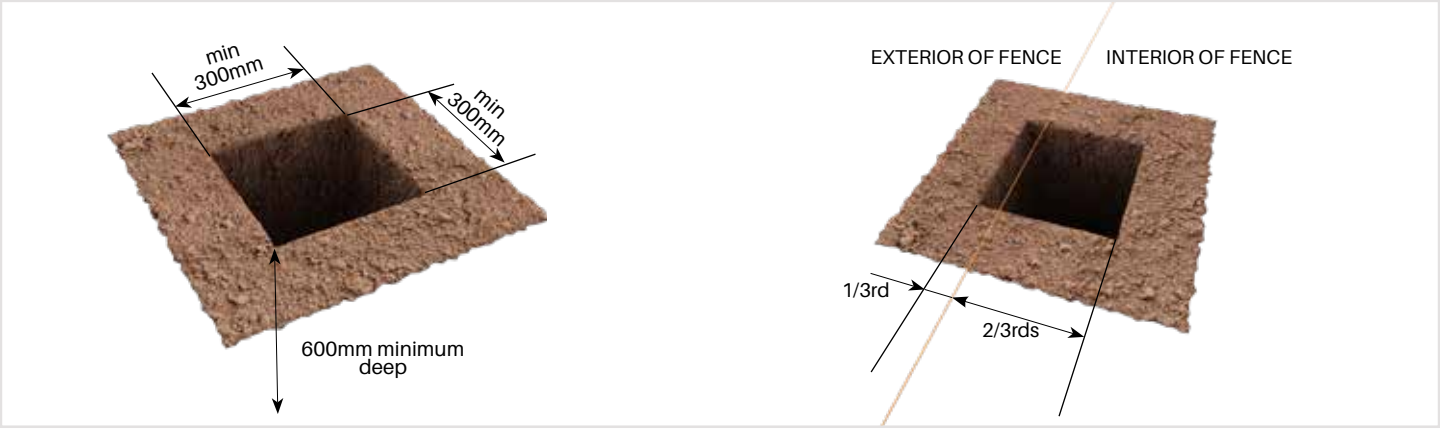

4 For in-ground installation dig holes for posts minimum 600mm deep by 300x300mm wide.
Hole positioning should be dug so that posts can be inserted against string-line by digging the holes approximately 2/3rds inside the string-line. Refer above-right image.
Holes for posts should be minimum 600mm deep.
If using base plated posts ignore above step and refer next page.

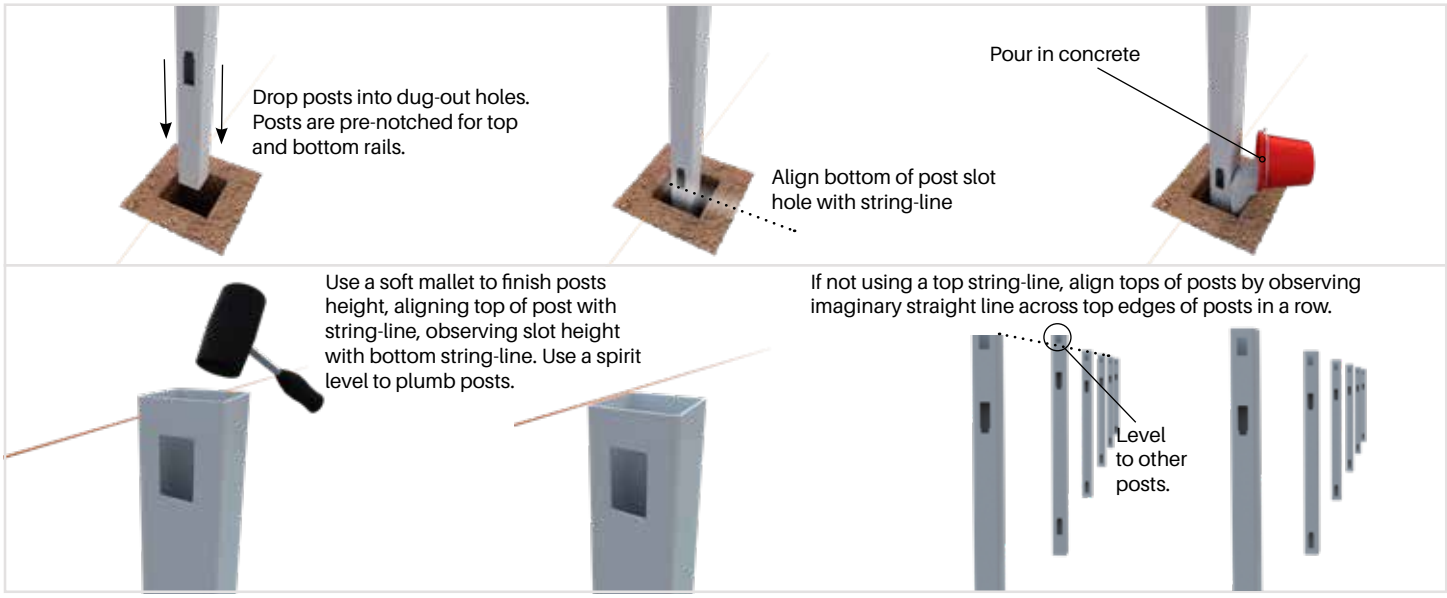

5 For FENCE POSTS:
Set posts into ground ensuring appropriate gap at bottom (refer Step 2). Pour in concrete.
For end posts use 1 way post, for in-line posts use 2 way and for corners use 90° posts.
Use a soft mallet with a wooden block on the top of the fence posts to drive the post into the wet concrete to the desired height, aligning with both top and bottom string lines. If not using top string line, assess height of posts in a line by eye (illustrate).
Check posts plumb using a spirit level and adjust as necessary.
Allow concrete to set before installing panels.

6 For GATE POSTS ONLY:
Plumb using a spirit level and adjust height and angle as necessary before concrete cures.
No I beam required for wind load areas as gate posts already include aluminium rigidity inserts.

Images & drawings are not to scale

COMBO FENCING INSTALL GUIDE

OPTIONAL EXTRA – ALUMINIUM INTERNAL STIFFENER I-BEAM FOR AREAS REQUIRING WIND LOAD CONSIDERATION

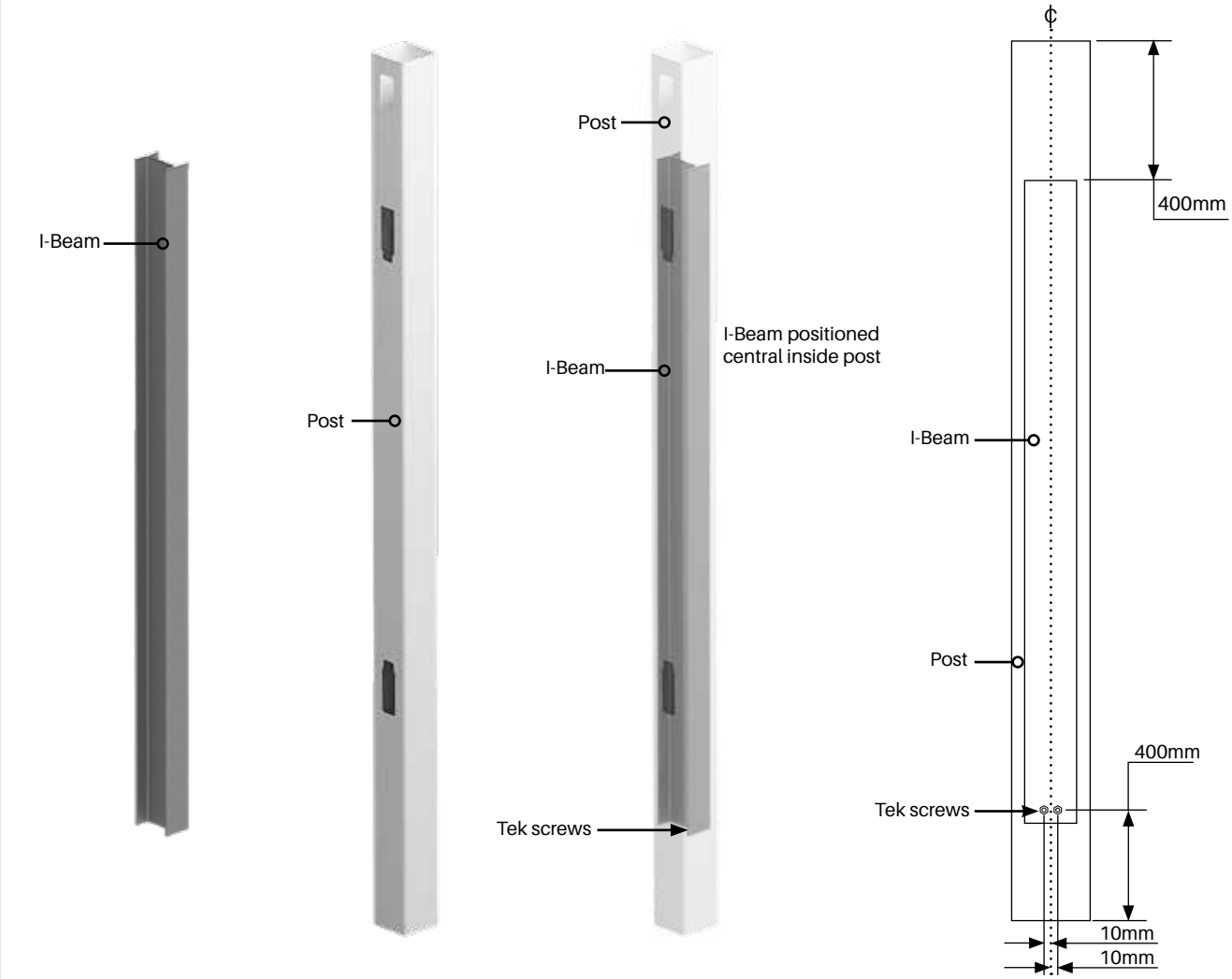

* OPTIONAL EXTRA – ALUMINIUM INTERNAL STIFFENER I-BEAM FOR AREAS REQUIRING WIND LOAD CONSIDERATION

If wind load consideration is not required, ignore this step.

For a fence panel at 2450 centre to centre and 1800mm high, a post stiffener will allow up to N4/C2 (AS4055 classification).

If Stiffener I-Beam installed ensure I-Beam is positioned 400mm down from top of post and remains straight when installed. Ensure I-Beam does not lean to one side.

Secure Stiffener I-Beam to post using 2 x tek screws offset 10mm on either side from centre of post and approx 400mm from bottom of post.

Before screwing off ensure I-Beam is central in post. (consider using internal timber chocks or similar to ensure I-Beam remains centre and straight – chocks and fixing screws not included).

NOTE: 90 degree slotted post cannot be used with Stiffener I-beam. Use 2x offset 1 way posts instead.

GATE POSTS: Gate posts sold with aluminium inserts for rigidity. Use gate posts for both hinge and latch sides of gate. Pay attention to orientation of slots on post, ensuring rail slots face away from the gate opening.

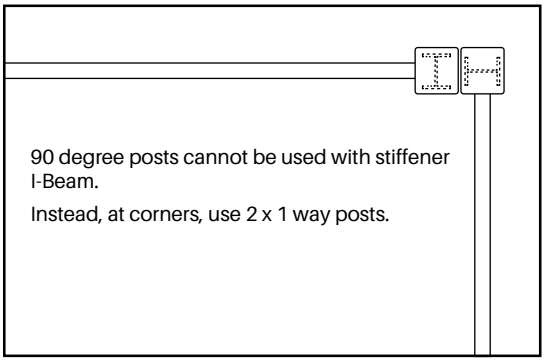

COMBO FENCING INSTALL GUIDE

THIS SECTION RELATES TO BASE PLATED POSTS

NOTE: BASE PLATED POSTS NOT SUITABLE FOR AREAS OF WIND LOAD.

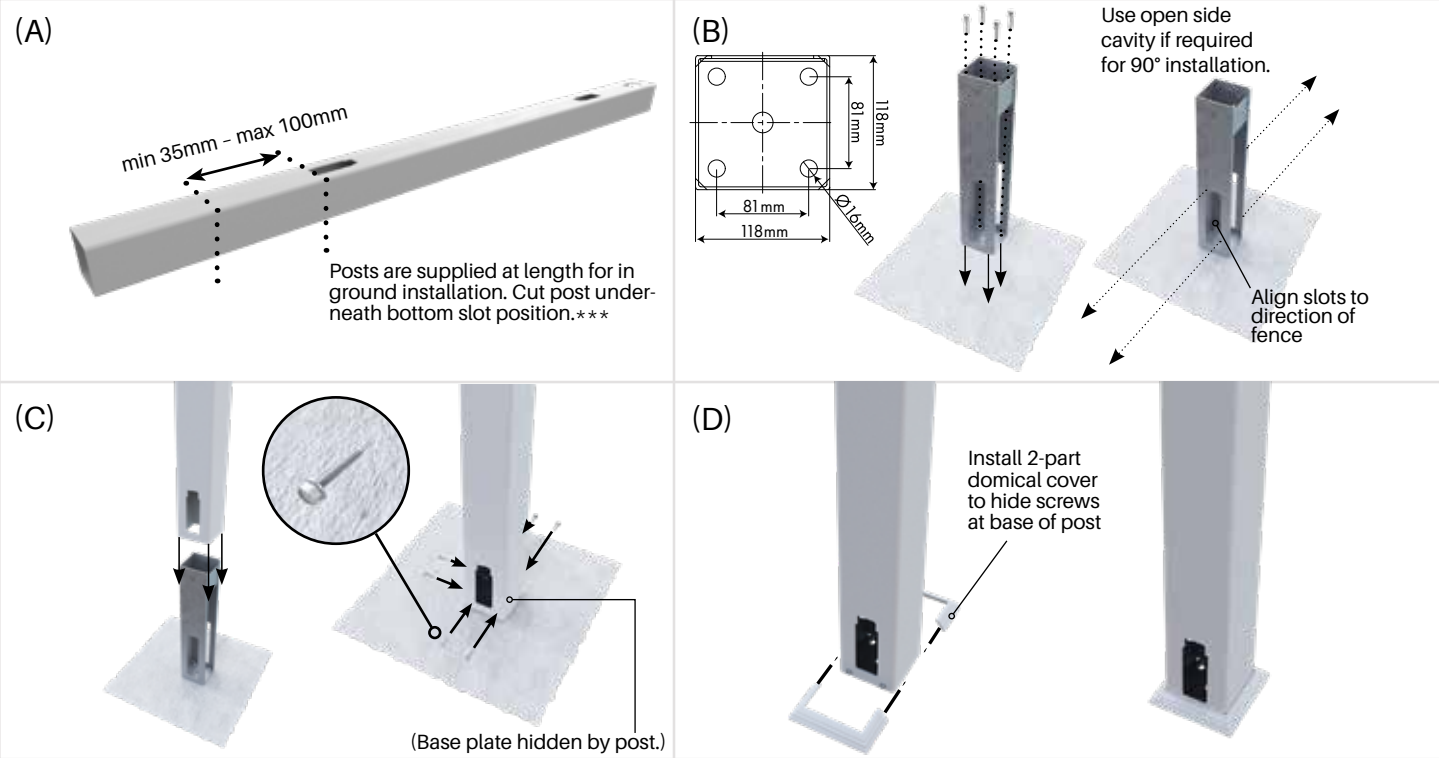

** BASE PLATED POSTS ONLY:
(A) Cut posts to required length – cut post underneath bottom slot position. ***Cut under slot from minimum 35mm up to 100mm maximum. 35mm under the slot hole equates to underside of bottom rail being 35mm from ground level.
(B) Affix base plates to ground using appropriate fixtures (not supplied), 4 x fixings required per base plate. Base plate hole diameters are 16mm. Ensure correct orientation of base plate to line up slots with fence direction.
(C) Slide post over base plate and screw to base plate using appropriate tek screws (not supplied) at approximately 15mm from ground level. Ensure tek screws engage into the base plates. Use 6 screws total, 2 on each side, avoiding the open side cavity of base plate.
(D) Install 2-part domical cover at bottom of post to hide screws.
***Domical cover height is 42mm. If domical cover required, minimum distance under slot must be 45mm.

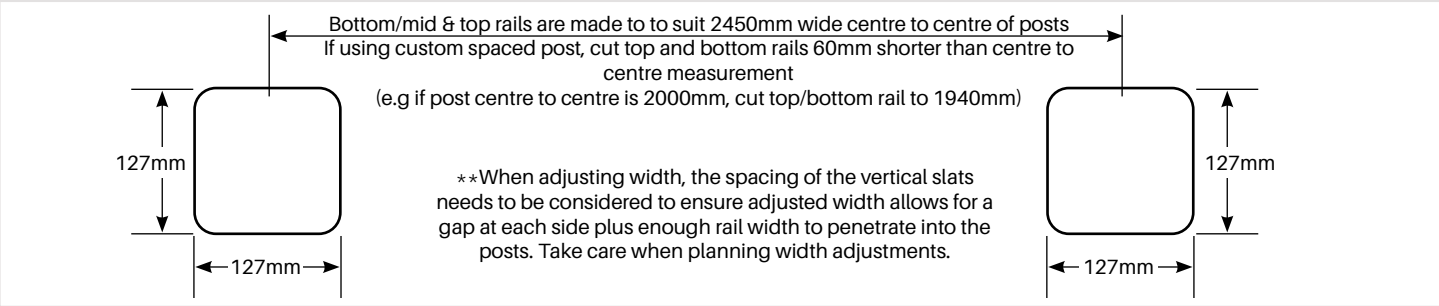

7 Bottom, mid & top rails are supplied suited to 2450mm centre to centre post spacing.
If using custom spacing, bottom, mid & top rails require width adjustment. Measure your installed posts from centre to centre. T he top and bottom rail need to be width adjusted to the centre to centre measurement minus 60mm.
For cutting of top and bottom rail, use a fine tooth blade to reduce chance of chipping (circular saws may leave rough edges).

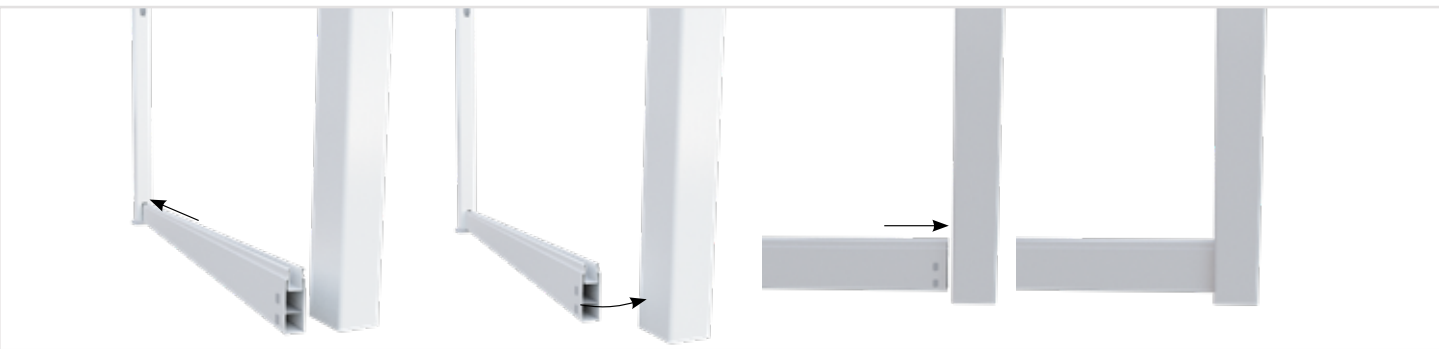

8 Slide bottom rail with aluminium insert into first post as far as possible and lever into adjacent post.
Slide back bottom rail to ensure notches have passed into adjacent post.
The bottom rail should recess into each post approx 33-35mm.

Images & drawings are not to scale

COMBO FENCING INSTALL GUIDE

** If using custom length rails, either re-notch using notching tool or secure into position on the inside of rail/inside of post – refer to diagram.

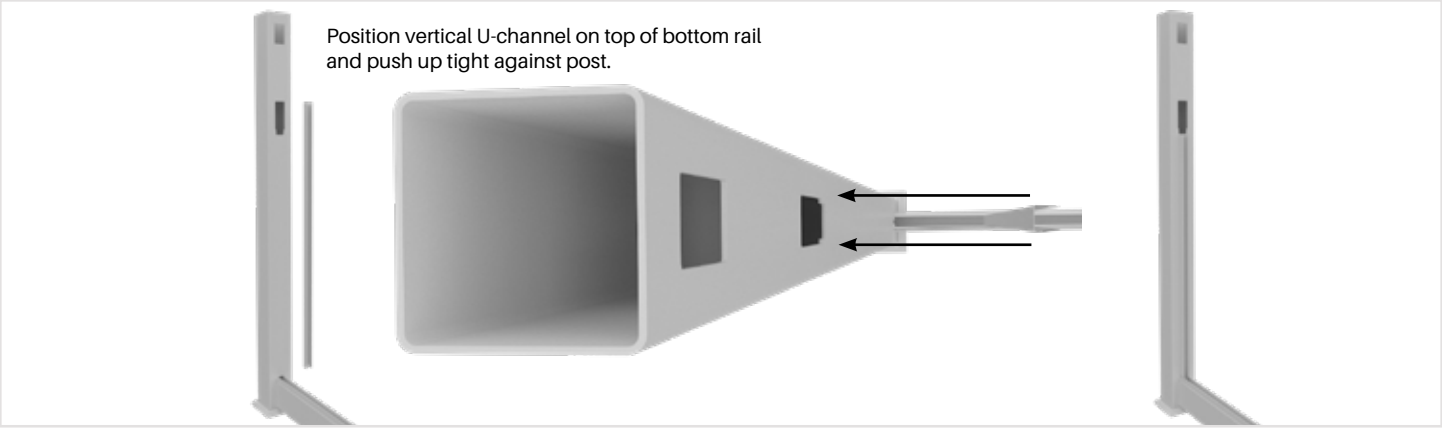

9 Position vertical U-channel on top of bottom rail and push up tight against post. Repeat step on all posts, where fence panels are to be installed.
U channel will be held against post both sides once vertical panels installed (no fixing required).
TIP: put a dab of silicone between post and U-channel rear wall

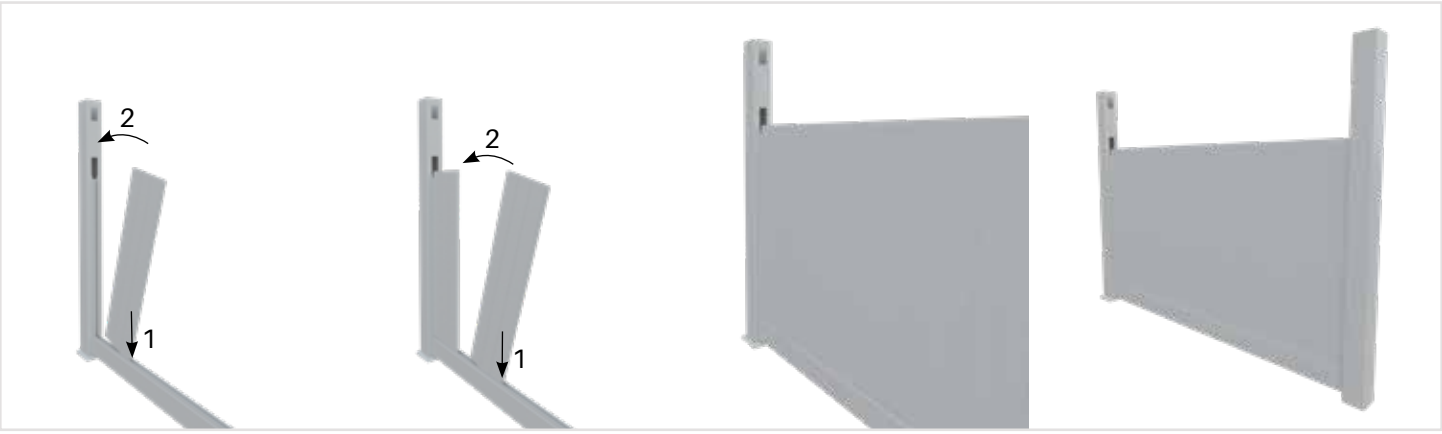

10 Starting at the vertical U channel on one side, insert vertical panels into bottom rail and lever into position. Repeat process towards the next post.
If using a custom length span, the last vertical panel will required cutting to size. Refer next step.

COMBO FENCING INSTALL GUIDE

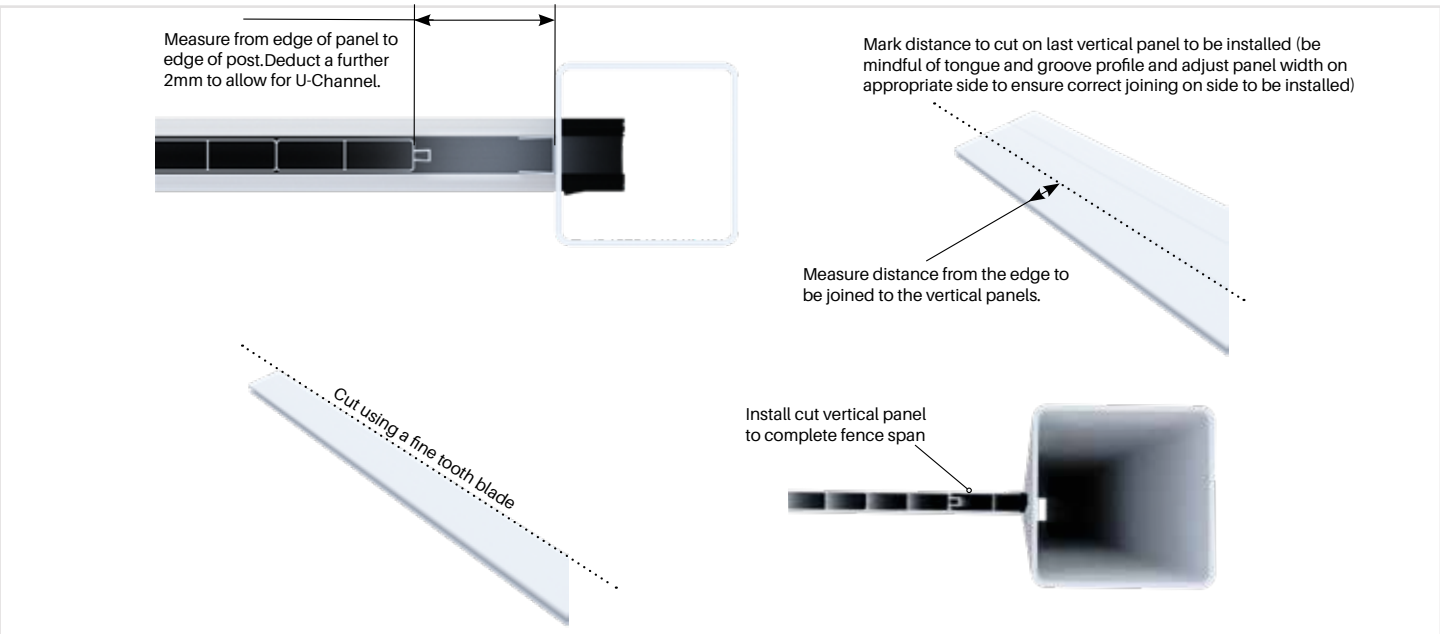

11 The last vertical panel in the span may need cutting to fit. Mark distance to cut on last vertical panel to be installed (be mindful of tongue and groove profile and adjust panel width on appropriate side to ensure correct joining on side to be installed) and cut using a fine tooth blade. Follow manufacturer's instructions for safe use of saw.

12 Install mid rail over vertical panels and simultaneously push top rail as far as possible into one post and then slide back into adjacent post.
Standard length top rails are self securing using the pre-notched tongues.
If using custom lengths, re-notch the tongues with notching tool (sold separately) or secure top rail in place on post using appropriate screws.
Note: The mid & top rails should recess into each post approx 33-35mm.

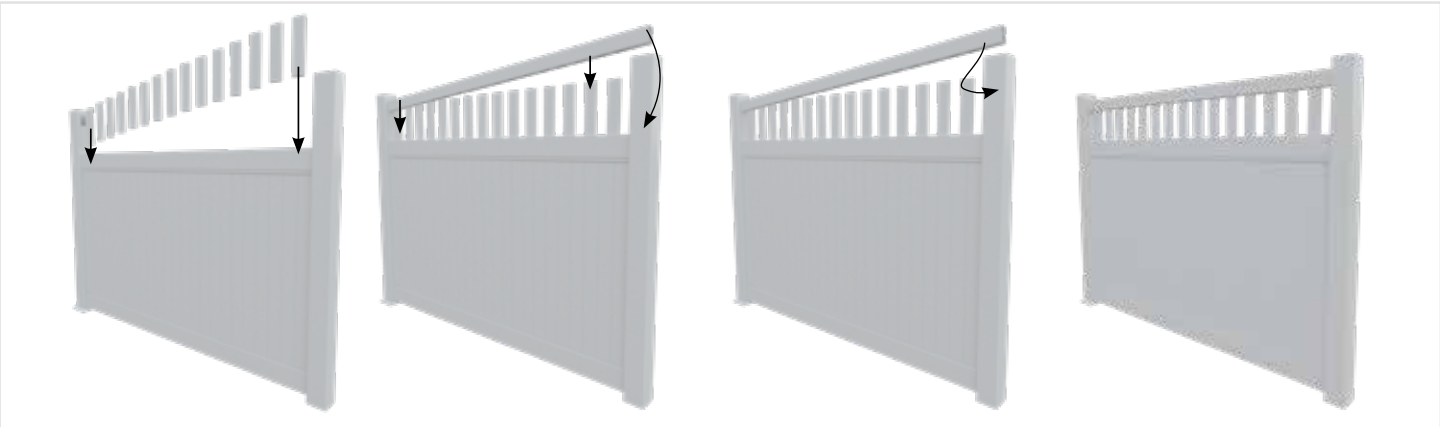

13 Insert slats into slots on top-side of midrail.
Install one side of top rail into top hole slightly, do not push fully in. While lowering top rail insert slats one at a time. Insert top rail into adjacent side.

Images & drawings are not to scale

glass outlet

COMBO FENCING INSTALL GUIDE

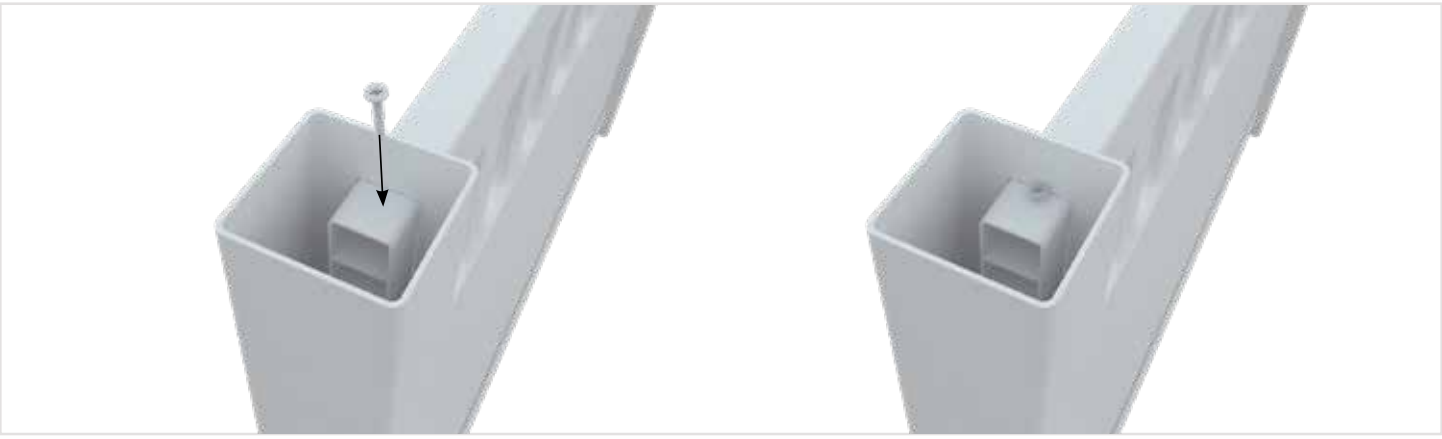

** If using custom span lengths secure top rail inside post with appropriate screws (if not re-notching with tool).

14 Apply silicone to inner of top caps and press on to each post to finish.
Repeat process for remaining posts.

COMBO PEDESTRIAN GATE

CUSTOM MADE

Custom pedestrian gate

Simply provide width and height requirements and we can custom cut and flat pack a combo privacy pedestrian gate featuring a sturdy aluminium outer frame with PVC Hampton inserts. Easy to assemble. To complete, use D&D white hinges & latch.

- CUSTOM CUT TO SIZE & FLAT PACKED
- EASY TO ASSEMBLE
- SENDING AUSTRALIA WIDE
- SIMPLY PROVIDE GATE SIZE REQUIRED
- SUPPLIED FLAT PACKED READY FOR EASY ASSEMBLY

NOTE: Refer Pg85-88 for hinge & latching options

Instant quoting/pricing

TAKE THE HASSLE OUT OF QUOTING

Simply input pedestrian gate dimensions in our easy to use FREE Excel form and get instant pricing.

Contact us and we can email to you.

- INSTANT PRICING
- MICROSOFT EXCEL FORMAT
- EASY TO USE

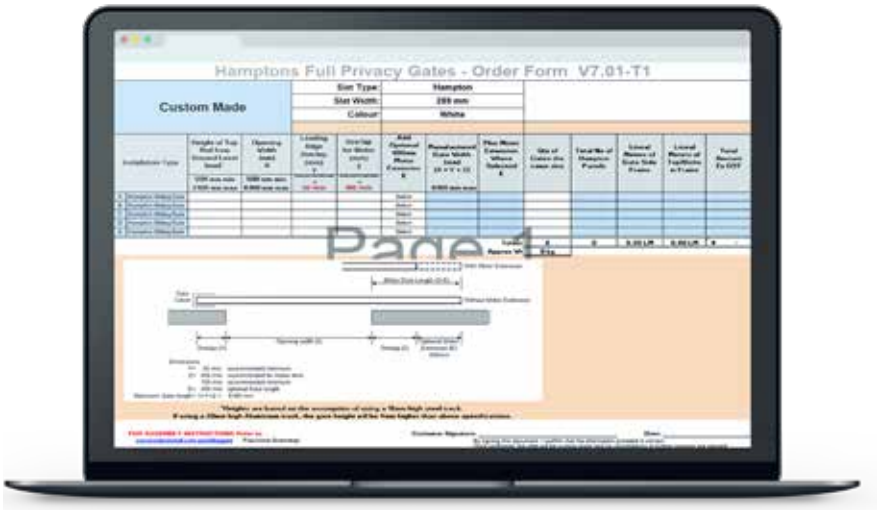

CONTACT US TO GET YOUR COPY OF THE ORDER FORMS

www.glassoutlet.com.au/contact

Images & drawings are not to scale

SEMI PRIVACY FENCING

SEMI PRIVACY FENCING

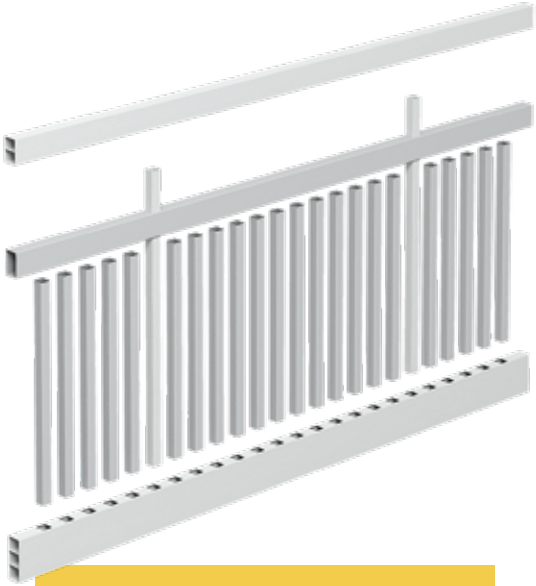

KIT INCLUSIONS

- 1x punched top rail (2388mm W)
- 1x punched mid rail (2388mm W)
- 1x punched bottom rail (2388mm W) w/ aluminium insert
- 22x pickets (785mm H)
- 2x pickets (1030mm H)

Semi privacy panel kit

2388MM WIDE
1200MM HIGH

Order Code: **HF-SEMIP-PANEL**

- Flat pack kit in a box – easy assembly
- White UV stabilised PVC with protective titanium dioxide additives

IDEAL FOR FRONT/ BOUNDARY FENCING

TECH SPECS

- Top rail: 2388mmW x 89mmH x 51mmD; 2.8mm wall thickness
- Mid rail: 2388mmW x 89mmH x 51mmD; 2.8mm wall thickness
- Bottom rail: 2388mmW x 152mmH x 51mmD; 2.2mm wall thickness
- Pickets: 785mmH x 38mmW x 38mmD with 2x pickets 1030mmH
- Achieves overall panel height of 1200mm
- 57mm gap between pickets
- Pickets easily insert into punched rails

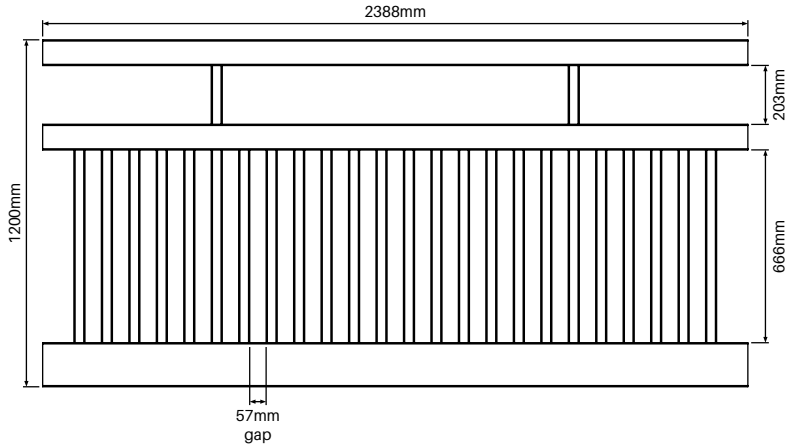

SEMI PRIVACY FENCING

FULLY ASSEMBLED GATE
NO ASSEMBLY REQUIRED

Semi privacy gate

1000MM WIDE
1200MM HIGH

Order Code: **HF-SEMIP-GATE**

- Fully assembled gate including 2 x flat top caps
- White UV stabilised PVC with protective titanium dioxide additives

TECH SPECS

- Bottom rail includes aluminium insert for extra rigidity
- Vertical side posts/rails are 1250mmH x 102mmW x 63mmD; 3mm wall thickness
- Distance between top & bottom rail is 1200mm
- Includes 4 x aluminium internal inserts for rigidity (refer cross hatch area in drawing). Install hinges & latch in these areas for maximum fixing strength
- Gate cannot be width or height adjusted

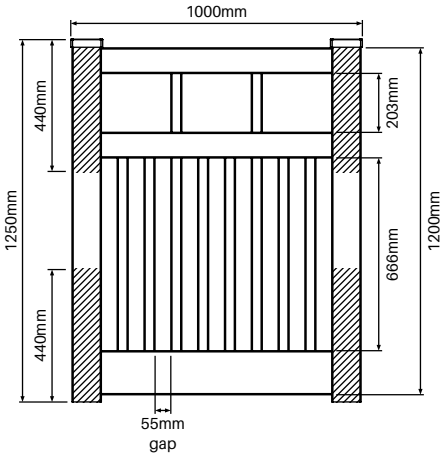

FULLY ASSEMBLED GATE
NO ASSEMBLY REQUIRED

Semi privacy gate

1500MM WIDE
1200MM HIGH

Order Code: **HF-SEMIP-GATE-1500**

- Fully assembled gate including 2 x flat top caps
- White UV stabilised PVC with protective titanium dioxide additives

TECH SPECS

- Bottom rail includes aluminium insert for extra rigidity
- Vertical side posts/rails are 1250mmH x 102mmW x 63mmD; 3mm wall thickness
- Distance between top & bottom rail is 1200mm
- Includes 4 x aluminium internal inserts for rigidity (refer cross hatch area in drawing). Install hinges & latch in these areas for maximum fixing strength
- Gate cannot be width or height adjusted
- Ideal for wide single hinged gate or set up as double gates for driveway/wide openings

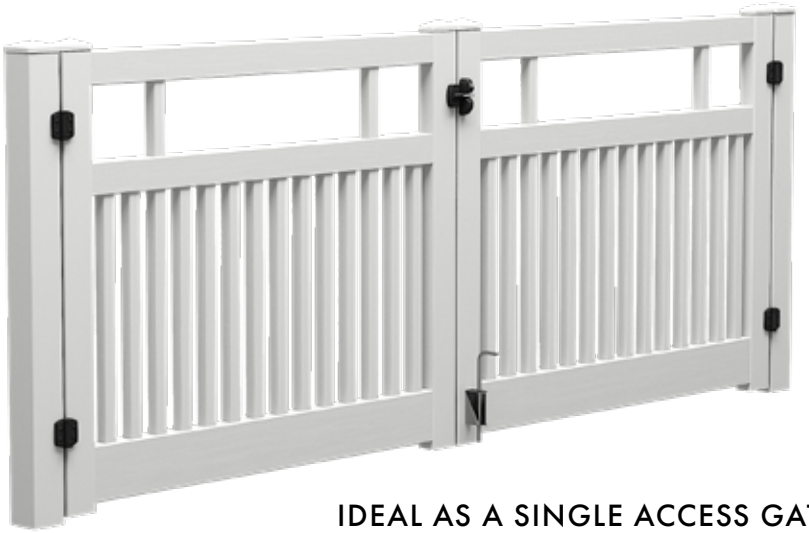

IDEAL AS A SINGLE ACCESS GATE OR DOUBLE GATE

Images & drawings are not to scale

SEMI PRIVACY FENCING

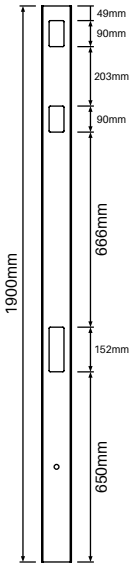

102MM X 102MM

1 way post – Semi privacy

1900MM LONG

Order Code: **HF-SEMIP-1900-1W**

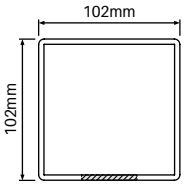

SLOTTED 1 SIDE ONLY

TECH SPECS

- 1900mmH x 102mmW x 102mmD; 3.8mm wall thickness
- White UV stabilised PVC with protective titanium dioxide additives
- Slotted holes for insertion of panel top, mid and bottom rails
- Use as start or finish post.
- Top cap sold separately
- Not suitable for hinging or latching a gate. Use Gate Post for that situation (Code HF-SEMIP-1900-1WGP)

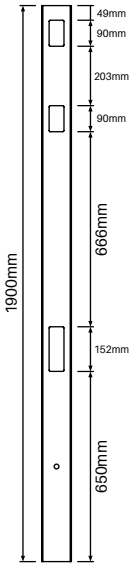

102MM X 102MM

2 way post – Semi privacy

1900MM LONG

Order Code: **HF-SEMIP-1900-2W**

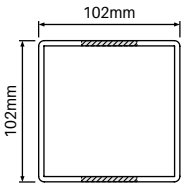

SLOTTED BOTH SIDES

TECH SPECS

- 1900mmH x 102mmW x 102mmD; 3.8mm wall thickness
- White UV stabilised PVC with protective titanium dioxide additives
- Slotted holes both sides of post for insertion of panel top, mid and bottom rails
- Use as inline post for straight fencing run
- Top cap sold separately

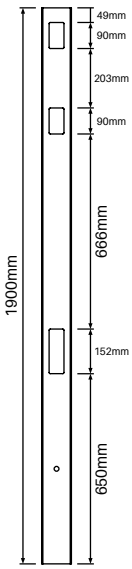

102MM X 102MM

90° post – Semi privacy

1900MM LONG

Order Code: **HF-SEMIP-1900-90**

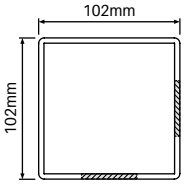

SLOTTED 2 SIDES
AT 90⁰

TECH SPECS

- 1900mmH x 102mmW x 102mmD; 3.8mm wall thickness
- White UV stabilised PVC with protective titanium dioxide additives
- Slotted holes on adjacent sides of post for insertion of panel top, mid and bottom rails
- Use at 90 degree corner
- Top cap sold separately

Images & drawings are not to scale

SEMI PRIVACY FENCING

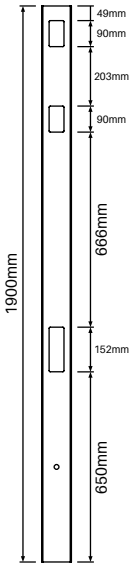

102MM X 102MM

1 way gate post – Semi privacy

1900MM LONG

Order Code: **HF-SEMIP-1900-1WGP**

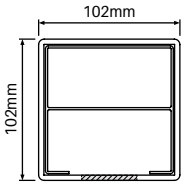

SLOTTED 1 SIDE
INCLUDES ALUMINIUM INSERT

TECH SPECS

- 1900mmH x 102mmW x 102mmD; 3.8mm wall thickness
- White UV stabilised PVC with protective titanium dioxide additives
- Slotted holes for insertion of panel top, mid and bottom rails
- Use as hinge post or latch post
- Includes internal 1.5mm thick aluminium insert entire length of post (ie 1900mm long). Provides post rigidity and also, sturdy substrate for fixing of hinges or latch
- Top cap sold separately

102MM X 102MM

Full post 'No slot holes' – Semi privacy

2100MM LONG

Order Code: **HF-VERTP-2100-FP**

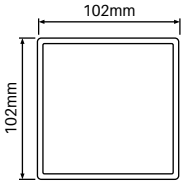

NO SLOT HOLES

TECH SPECS

- 2100mmH x 102mmW x 102mmD; 3.8mm wall thickness
- White UV stabilised PVC with protective titanium dioxide additives
- No slot holes – cut slot holes wherever needed or affix brackets
- Use hole cutting jig (code: HF-SEMIP-JIG) to assist routing holes if required
- Ideal for height adjusted panels where slot hole positions are different to standard posts with pre-routed holes
- Brackets may also be affixed to post for holding panel top/bottom rails (code: HF-SEMIP-WB-3PK) – an easy alternative instead of routing slot holes
- Useful for panels with sloping ground for stepping panels

Concealed base plate

616MM HIGH

Order Code: **HF-SEMIP-BP**

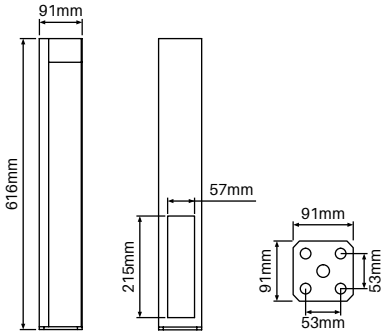

TECH SPECS

- Internal fitting base plate suits 1 way, 2 way and 90 degree posts. Not suitable for use with 1 way 'gate' post
- 6mm thick base plate with 2mm thick vertical walls
- Cold-galvanized steel provides strong corrosion resistance
- 4 x fixing holes in base plate
- Post sleeves over base plate and fixes to internal base plate with tek screws. Use 2 part domical cover to hide screw fixings
- Base plate system not suitable for use where wind load considerations required
- **Refer install guide on page 54** for fitting information

Images & drawings are not to scale

glass
outlet

SEMI PRIVACY FENCING

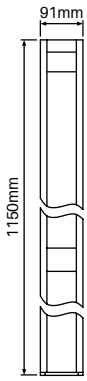

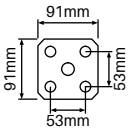

HEAVY DUTY

Concealed base plate

1150MM HIGH

Order Code: **HF-SEMIP-BP-1150**

TECH SPECS

- Internal fitting base plate suits 1 way post.
- Enables base plate fitting of 1 way post for use as a hinge and/or latch post
- 6mm thick base plate with 2mm thick vertical walls.
- 1150mm high vertical walls provide post rigidity also, sturdy substrate for fixing of hinges and/or latch
- Cold-galvanized steel provides strong corrosion resistance
- 4 x fixing holes in base plate
- Post sleeves over base plate and fixes to internal base plate with tek screws. Use 2 part domical cover to hide screw fixings
- Base plate system not suitable for use where wind load considerations required

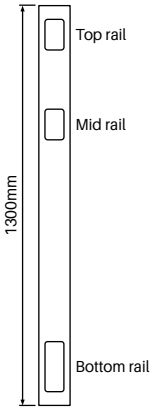

Hole cutting jig

Order Code: **HF-SEMIP-JIG**

TECH SPECS

- Made from SS304
- Jig provides slot hole required in 102x102mm post for top, mid & bottom rail insertion
- New post slot holes may be required if stepping panels for slopping ground or if panels are height adjusted requiring change of distance between standard post slot holes
- Jig suits use with 6.35mm 1/4" trimmer with 16mm diameter guide (eg Makita DRT50ZJX2 trimmer)

Wall/post brackets

3 PACK

Order Code: **HF-SEMIP-WB-3PK**

TECH SPECS

- 3 pack of brackets – 2x brackets for top/mid rail & 1x bottom rail bracket
- Affix to existing post or wall to start or end a of semi privacy fencing
- Includes 8x screws for fixing off brackets to top/bottom rails + 12x cover caps to hide screws
- White UV stabilised PVC with protective titanium dioxide additives
- Fixings for screwing brackets to post or wall not supplied

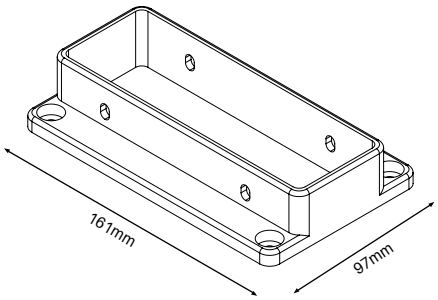

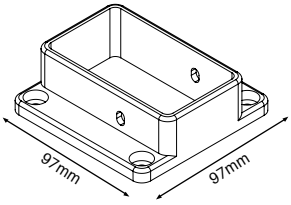

Images & drawings are not to scale

SEMI PRIVACY FENCING

Hamptons fencing tool

Order Code: **HF-TOOL**

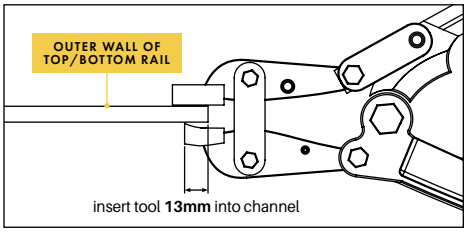

TECH SPECS

- Tool creates a protruding flap/tag at the end of the horizontal top, mid & bottom rail which prevents the rail pulling out from slots in posts
- Specially designed tooling in jaw creates the protruding flap/tag

HOW TO USE

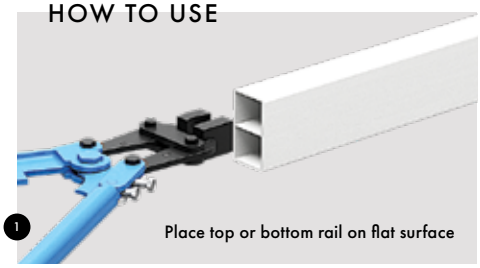

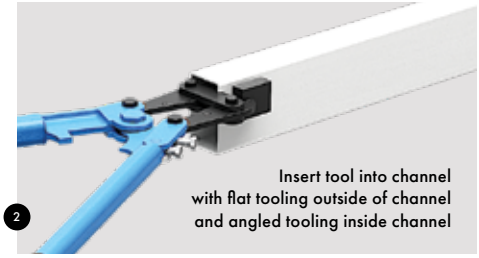

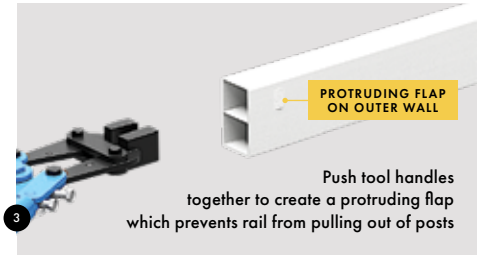

Post plugs

4 PACK

White finish

Order code: **SS-POSTPLUG-4PK-W**

- Ø32mm outer top suits 25mm hole
- Ideal for covering hole in post when affixing post to wall with inner fixing
- Suits post wall thickness 1.5mm – 3.2mm

1 Drill a 25mm diameter hole through front wall of post

2 Drill rear wall of post with required diameter for fixing and then fix post to wall. Insert appropriate fixing into the wall for affixing post

4 Repeat the process as required

**Black plug shown in imagery above. Plugs supplied are white.*

Self drilling tek screws

12Gx20mm – BAG OF 100

Order Code: **SS-TS-100-B (Black)**
SS-TS-100-W (White)

- Self drilling tek screw featuring integrated thread and drill/cutting tip
- 12G x 20mm tek screw with hex head
- Packed in convenient bags of 100 screws

Images & drawings are not to scale

SEMI PRIVACY FENCING

2 part domical cover

Order Code: **HF-SEMIP-DC**

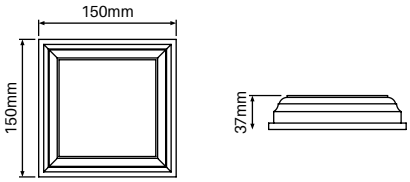

TECH SPECS

- 2 part domical cover – suits 102x102mm post
- Can be fitted after post and panels are installed. 2 parts neatly clip together
- White UV stabilised PVC with protective titanium dioxide additives
- Provides a stylish post finish

English style cap

Order Code: **HF-SEMIP-EC**

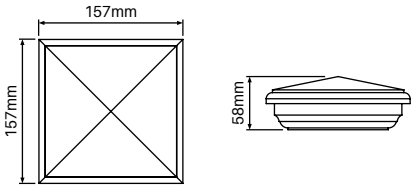

TECH SPECS

- Press on external fit cap
- 'English' style cap with tapered top provides a decorative finish
- White UV stabilised PVC with protective titanium dioxide additives
- Use silicone for long term binding

Slimline tapered cap

Order Code: **HF-SEMIP-STC**

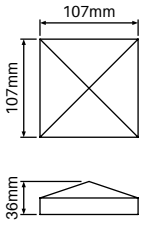

TECH SPECS

- Press on external fit cap
- Slimline tapered cap for minimalist post finishing
- White UV stabilised PVC with protective titanium dioxide additives
- Use silicone for long term binding

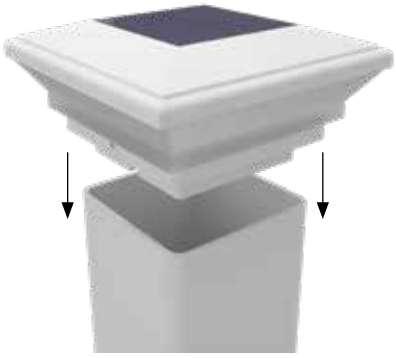

Solar post light

Order Code: **HF-SOLAR-102**

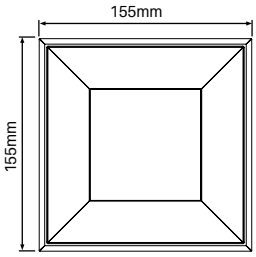

TECH SPECS

- Use solar light instead of standard cap for top of 102mmx102mm square posts
- Suits 1 way, 2 way, 90 degree, full and gate posts
- Light automatically turns on when no light source detected. With full charge, light stays on continuously for approx. 8 hours
- Internal replaceable battery lasts approx. 1.5 years. Easy to replace. (2 x Ni-MH AA 1.2V batteries)

** Refer www.productinstall.com.au/hamptons (password: hamptons1) for guidance on install of solar light and replacement of batteries.*

glass outlet

SEMI PRIVACY FENCING INSTALL GUIDE

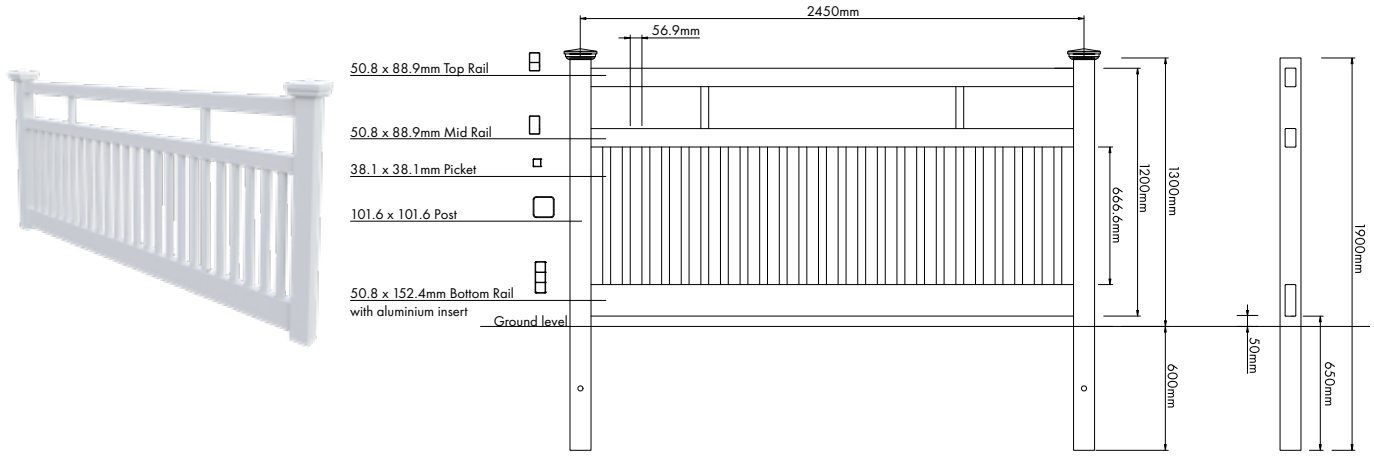

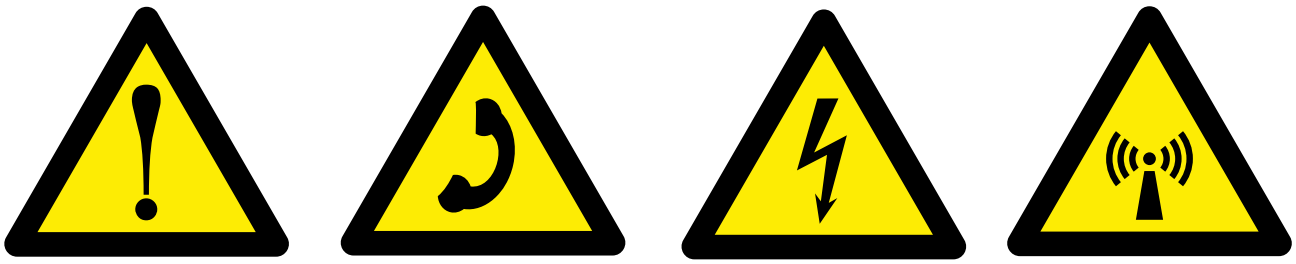

1 Check for any utilities in ground before digging as well as observing property boundaries and council regulations where appropriate.

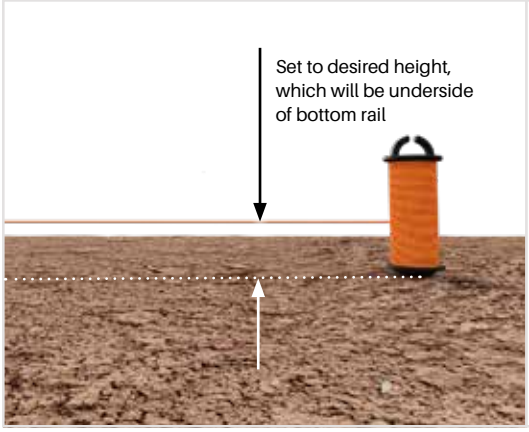

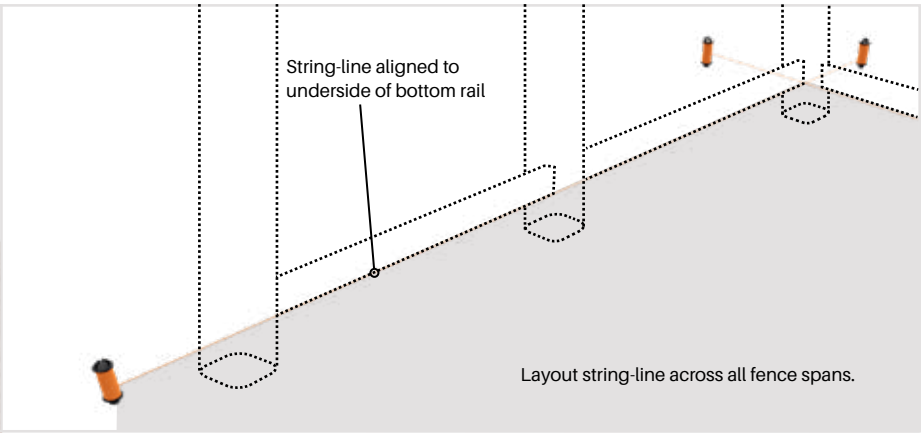

2 Assess layout of fence and set out string line around outside perimeter of fence.
The string must be positioned along the outside perimeter of your posts.
Ensure allowance made for digging post holes and concreting within your property boundaries and to avoid utility lines.
Set the height of the string-line to the desired height of the underside of the bottom fence rail.
A gap under the bottom rail of 50mm is standard, however adjust as needed for each specific install location.

SEMI PRIVACY FENCING INSTALL GUIDE

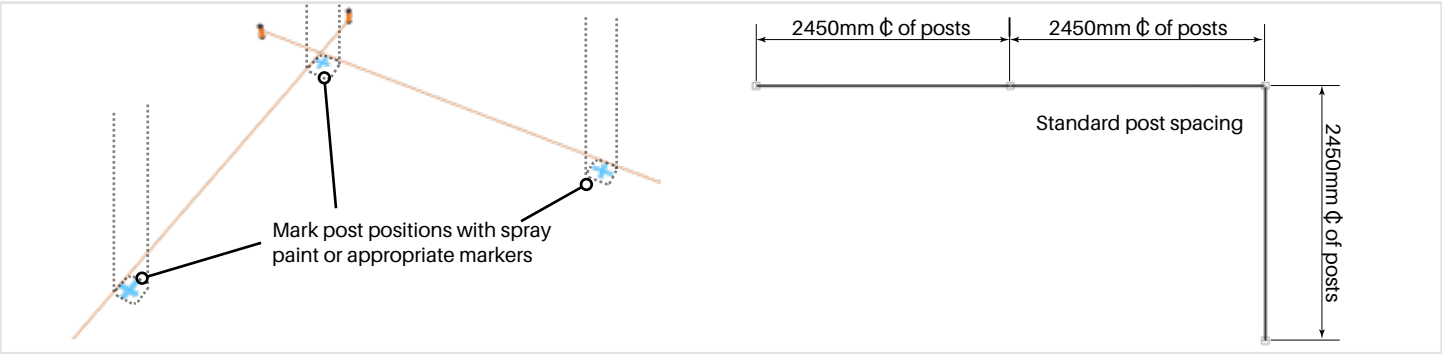

3 Mark post to post centres using appropriate markings such as spray paint or stakes.
Standard fence panel post centres are at 2450mm. If using shorter spans, space posts appropriately.
Posts are 102x102mm square.

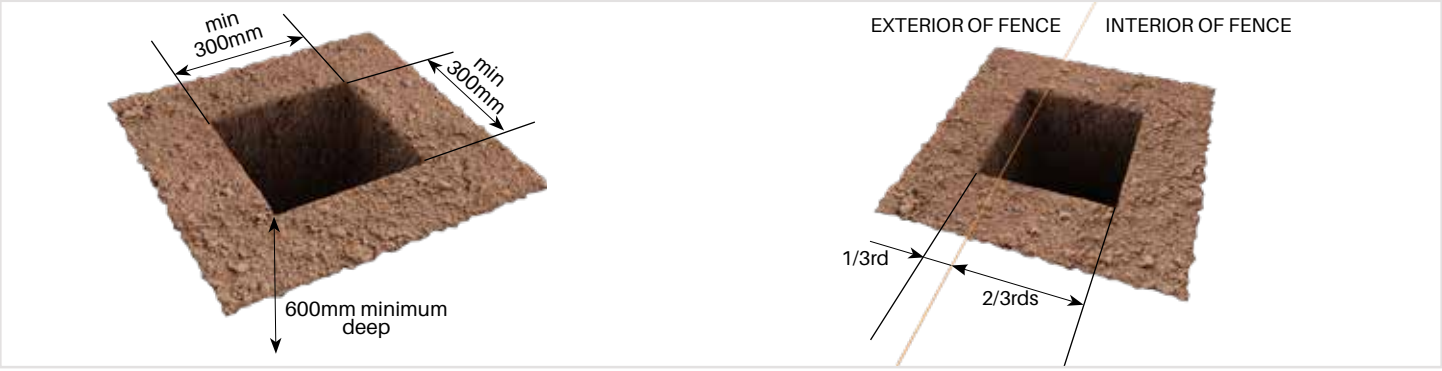

4 For in-ground installation dig holes for posts minimum 600mm deep by 300x300mm wide.
Hole positioning should be dug so that posts can be inserted against string-line by digging the holes approximately 2/3rds inside the string-line. Refer above right image.
Holes for posts should be minimum 600mm deep.
If using base plated posts ignore above step and refer next page.

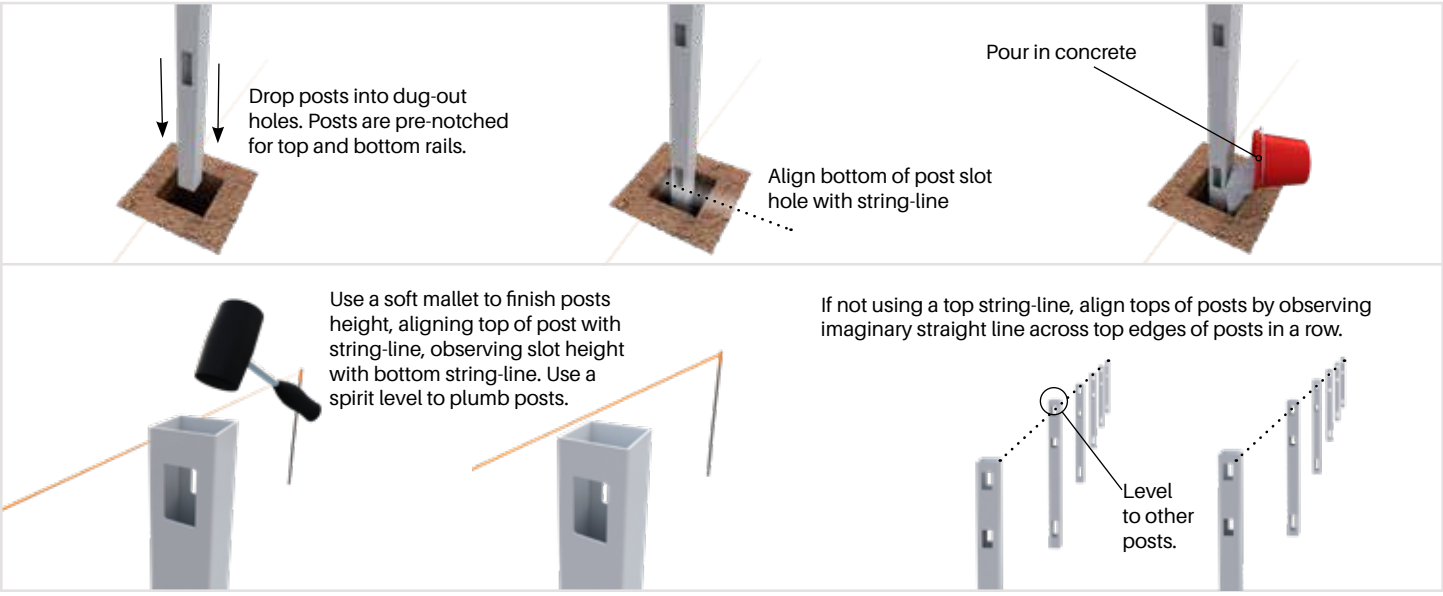

5 For FENCE POSTS:
Set posts into ground ensuring appropriate gap at bottom (refer Step 2). Pour in concrete.
For end posts use 1 way post, for in-line posts use 2 way and for corners use 90° posts.
Use a soft mallet with a wooden block on the top of the fence posts to drive the post into the wet concrete to the desired height, aligning with both top and bottom string lines. If not using top string line, assess height of posts in a line by eye (illustrate).
Check posts plumb using a spirit level and adjust as necessary.
Allow concrete to set before installing panels.

6 For GATE POSTS ONLY:
Gate posts sold with aluminium inserts for rigidity. Use gate posts for both hinge and latch sides of gate.
Pay attention to orientation of slots on post, ensuring rail slots face away from the gate opening.
Plumb using a spirit level and adjust height and angle as necessary before concrete cures.

Images & drawings are not to scale

glass outlet

SEMI PRIVACY FENCING INSTALL GUIDE

THIS SECTION RELATES TO BASE PLATED POSTS

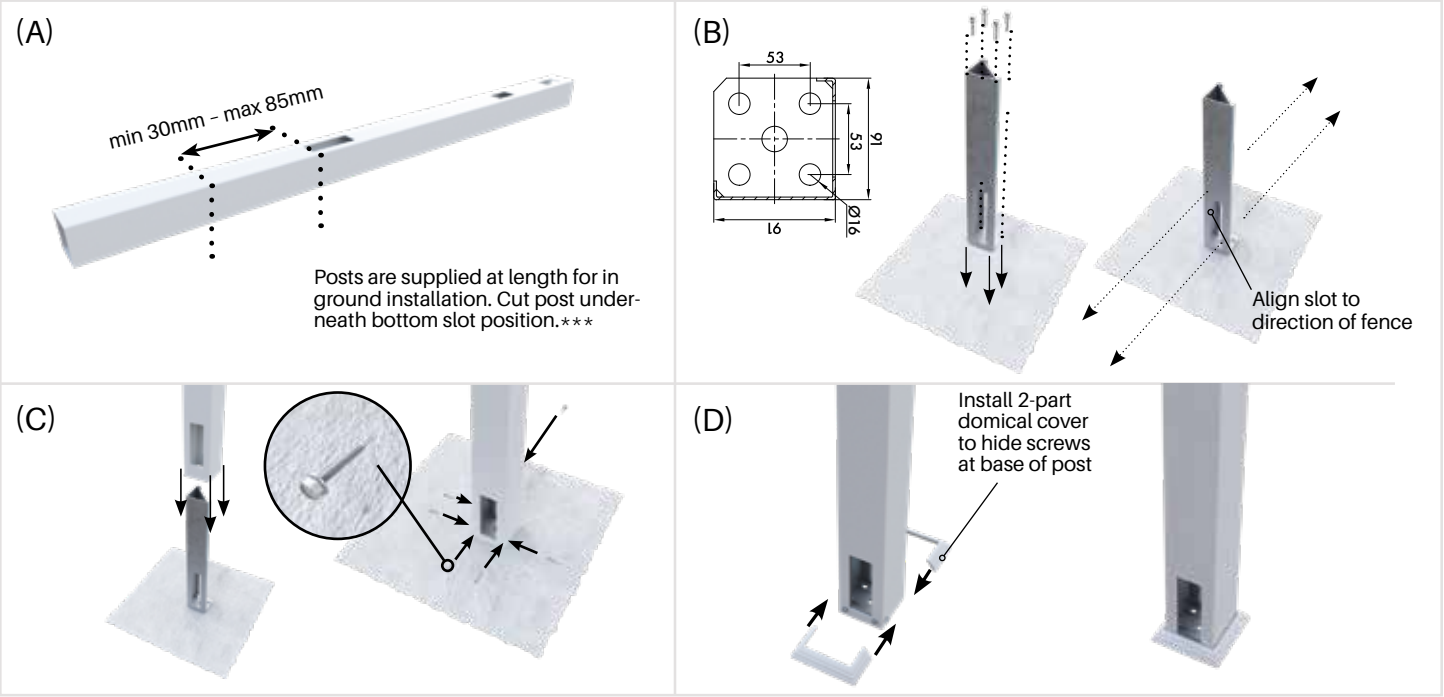

** BASE PLATED POSTS ONLY:
(A) Cut posts to required length – cut post underneath bottom slot position. ***Cut under slot from minimum 30mm up to 85mm maximum.
30mm under the slot hole equates to underside of bottom rail being 30mm from ground level.
(B) Affix base plates to ground using appropriate fixtures (not supplied), 4 x fixings required per base plate.
Base plate hole diameters are 16mm. Ensure correct orientation of base plate to line up slots with fence direction.
(C) Slide post over base plate and screw to base plate using appropriate tek screws (not supplied) at approximately 15mm from ground level.
Ensure tek screws engage into the base plates. Use 6 screws total, 2 on slotted side, 2 on solid side and 1 on each wing. Ensure tek screws do not clash.
(D) Install 2-part domical cover at bottom of post to hide screws.
***Domical cover height is 37mm. If domical cover required, minimum distance under slot must be 40mm.

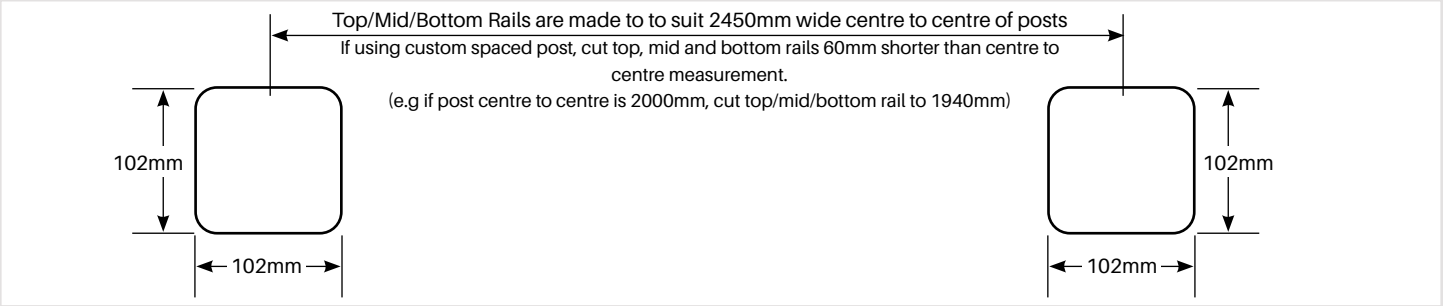

7 Top and bottom rails are supplied suited to 2450mm centre to centre post spacing.
If using custom spacing, top, mid and bottom rails require width adjustment. Measure your installed posts from centre to centre.
The top, mid and bottom rails need to be width adjusted to the centre to centre measurement minus 60mm.
For cutting of top, mid and bottom rails, use a fine tooth blade to reduce chance of chipping (circular saws may leave rough edges).

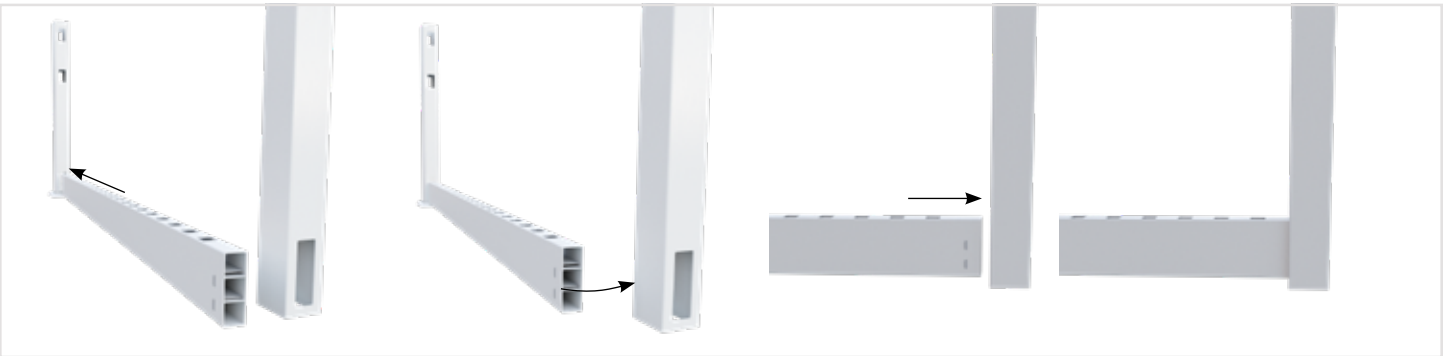

8 Slide bottom rail with aluminium insert into first post as far as possible and lever into adjacent post.
Slide back bottom rail to ensure notches have passed into adjacent post.
The bottom rail should recess into each post approx 20mm.

Images & drawings are not to scale

SEMI PRIVACY FENCING INSTALL GUIDE

9 Install short pickets into bottom-rail leaving long pickets for subsequent step. The long pickets are postitioned 6 pickets in from either end.

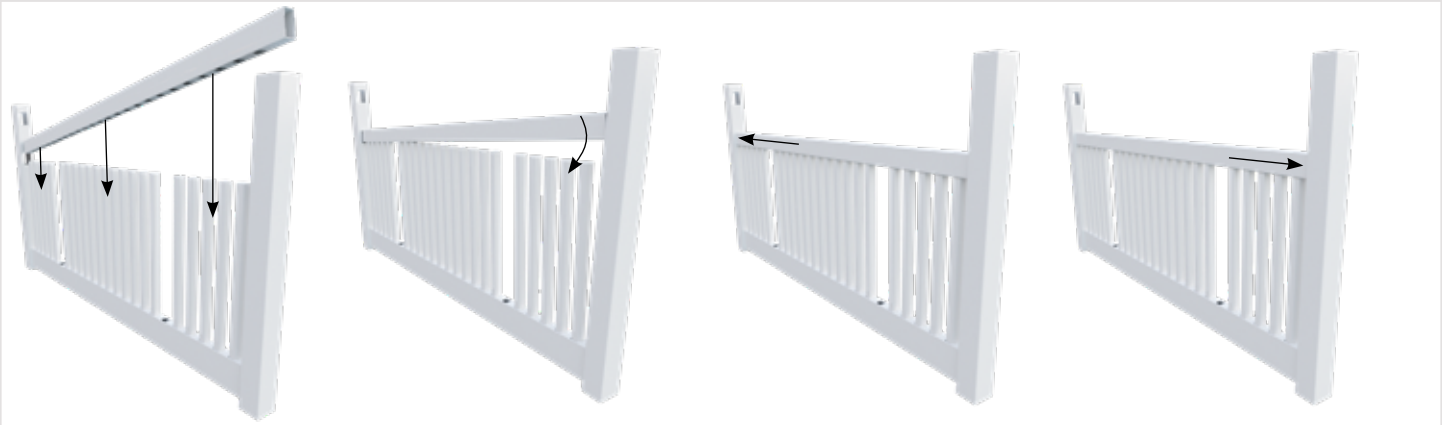

10 Push mid rail into slot on 1 post then lever into slot on adjacent post. Insert pickets as the mid-rail is levering down. Posts may flex to allow for insertion.

11 Insert long pickets through mid-rail and into bottom rail.
NOTE: If panels width adjusted and therefore horizontal rail widths adjusted, you may need to cut suitable holes through mid-rail and on underside of top-rail to allow for longer pickets to pass through. As standard, the longer pickets are evenly spaced from either end. You should consider this during fence layout planning.

SEMI PRIVACY FENCING INSTALL GUIDE

12 Install top rail over long pickets guiding pickets into holes on underside of top rail. Insert top rail into one post and then lever into adjacent post.

** If using custom lengths, re-notch the tongues with notching tool (sold separately) or secure top rail in place on post using appropriate screws.
Note: The top rail should recess into each post approx 20mm

13 Repeat process for remaining posts. Apply silicone to inner of top caps and press on to each post to finish.

3 RAIL FENCING

glass outlet

3 RAIL FENCING

*POSTS SOLD SEPARATELY

COST EFFECTIVE SOLUTION FOR FRONT/ BOUNDARY FENCING

Fencing Rails – 3 Pk

RAIL PROFILE
2388mmL
x 38mmD x 140mmH

Order Code: **HF-3RAIL-3PK**

IDEAL FOR FRONT/ BOUNDARY FENCING

TECH SPECS

- 3 rails packed together
- White UV stabilised PVC with protective titanium dioxide additives
- Each rail: 2388mmL x 38mmD x 140mmH
- 2mm wall thickness
- Features 2 internal ribs for added strength
- Pre-notched at ends to prevent pulling out from post slots
- Easily width adjustable. Simply cut down to size required
- 2388mm wide rails made to suit 2450mm centre to centre of posts installation

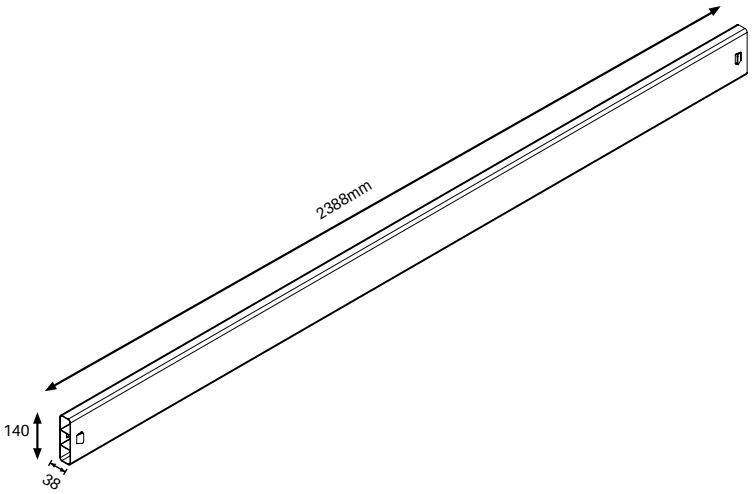

2388MM WIDE RAILS SUIT 2450MM POST CENTRE TO CENTRE INSTALLATION

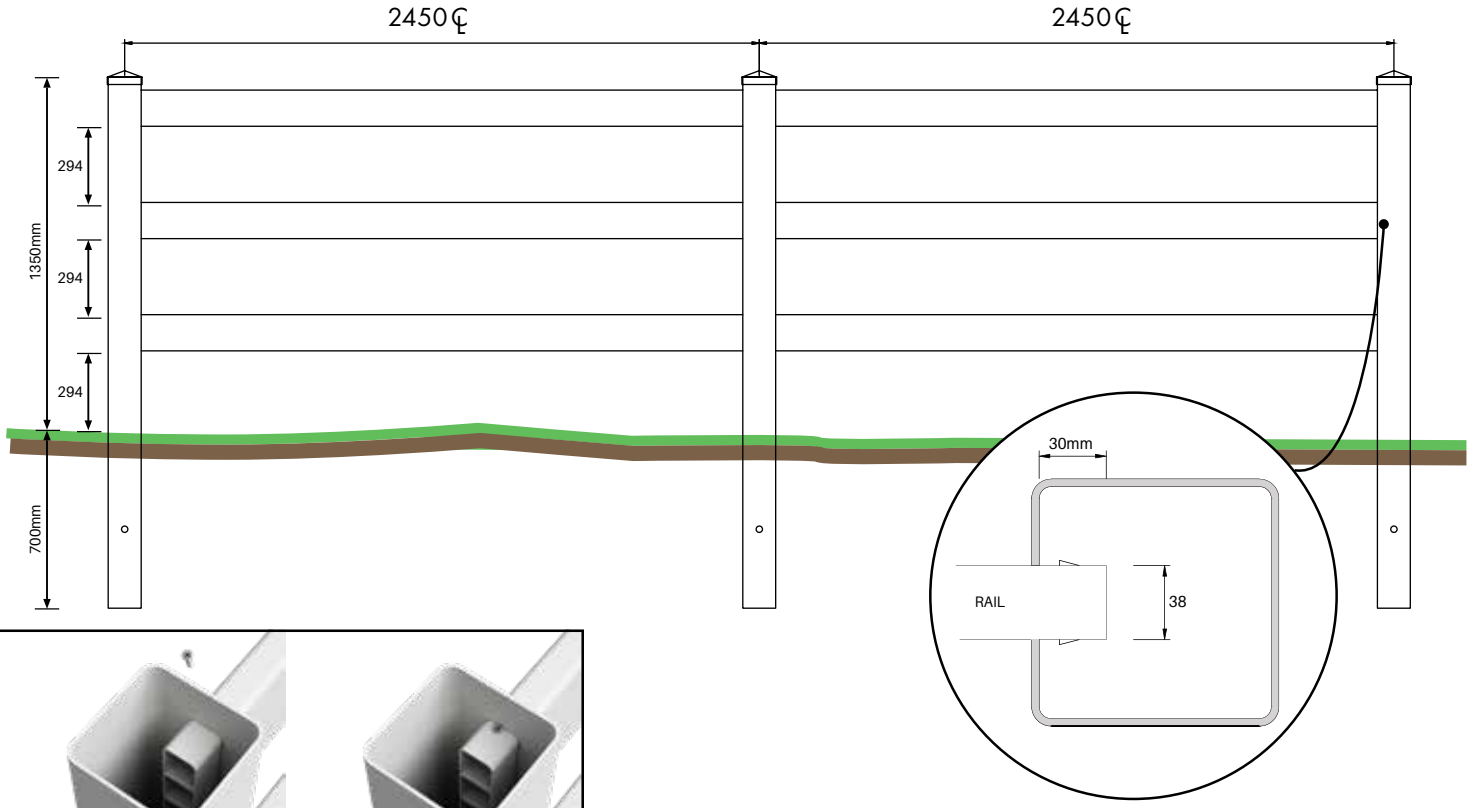

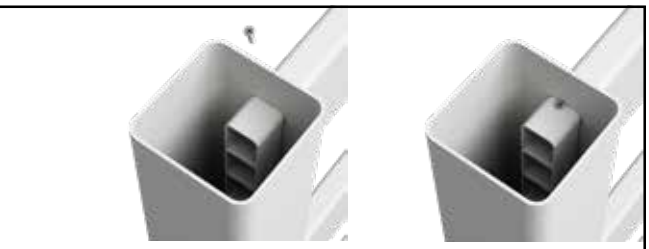

IF RAILS CUT DOWN FOR WIDTH ADJUSTMENT, SECURE IN POSITION WITH AN INTERNAL SCREW. SCREW PREVENTS RAIL FROM PULLING OUT

**COMMONLY A GAP OF APPROX 294MM IS LEFT FROM GROUND TO BOTTOM OF FIRST RAIL. OVERALL FENCE HEIGHT MAY BE MODIFIED BY ADJUSTING THE GAP LEFT FROM GROUND TO FIRST RAIL

Images & drawings are not to scale

3 RAIL FENCING

FLAT PACK IN A BOX
EASY ASSEMBLY

EASILY WIDTH ADJUSTABLE

3 Rail gate

1800MM WIDE
1300MM HIGH

Order Code: **HF-3RAIL-GATE-1800**

- Flat pack in a box ready for assembly
- Includes 2x top caps & screws for assembly
- Easily width adjustable

TECH SPECS

- Bottom rail includes aluminium insert for extra rigidity
- Cross brace adds rigidity
- Vertical side stiles are 1300mmH x 102mmW x 102mmD ; 3.8mm wall thickness
- Horizontal rails slot into sturdy sockets for long lasting gate strength & integrity
- Includes 4 x aluminium internal inserts (refer cross hatch in drawing). Install hinges and latch in these areas for maximum fixing strength
- White UV stabilised PVC with protective titanium dioxide additives

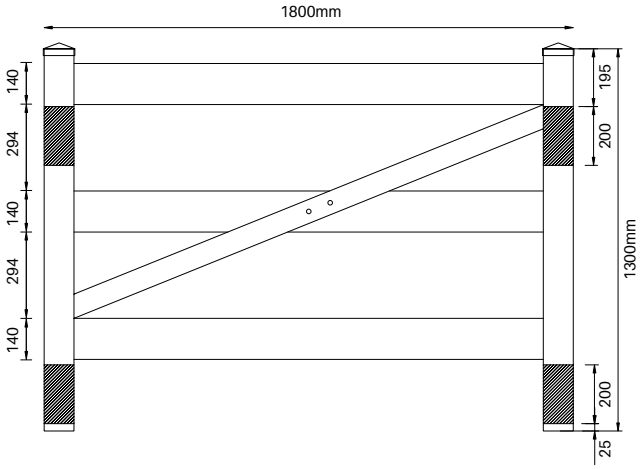

IDEAL AS A SINGLE ACCESS GATE OR DOUBLE GATE

Images & drawings are not to scale

glass outlet

3 RAIL FENCING

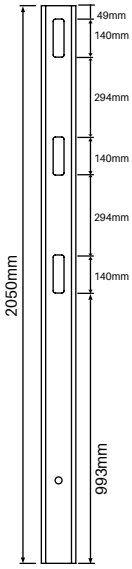

127MM X 127MM

1 way post – 3 Rail

2050MM LONG

Order Code: **HF-3RAIL-2050-1W**

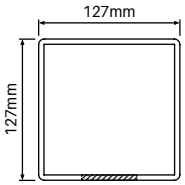

SLOTTED 1 SIDE ONLY

TECH SPECS

- 2050mmH x 127mmW x 127mmD
- 3.8mm wall thickness
- White UV stabilised PVC with protective titanium dioxide additives
- 3 x slotted holes for insertion of rails
- Use as start or finish post
- Not suitable for hinging or latching a gate. Use Gate Post for that situation (Code HF-3RAIL-2050-1WGP)
- Top cap sold separately

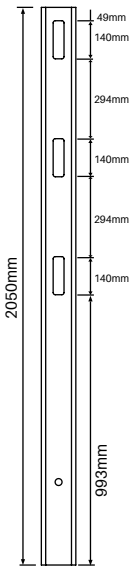

127MM X 127MM

2 way post – 3 Rail

2050MM LONG

Order Code: **HF-3RAIL-2050-2W**

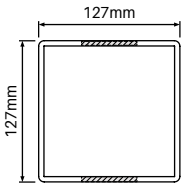

SLOTTED BOTH SIDES

TECH SPECS

- 2050mmH x 127mmW x 127mmD
- 3.8mm wall thickness
- White UV stabilised PVC with protective titanium dioxide additives
- 6 x slotted holes for insertion of rails
- Top cap sold separately

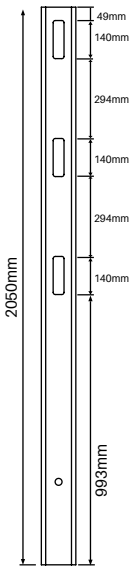

127MM X 127MM

90 degree post – 3 Rail

2050MM LONG

Order Code: **HF-3RAIL-2050-90**

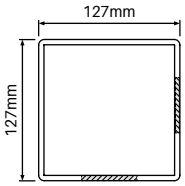

SLOTTED 2 SIDES
AT 90⁰

TECH SPECS

- 2050mmH x 127mmW x 127mmD
- 3.8mm wall thickness
- White UV stabilised PVC with protective titanium dioxide additives
- 6 x slotted holes for insertion of rails at 90 degree junction
- Top cap sold separately

Images & drawings are not to scale

3 RAIL FENCING

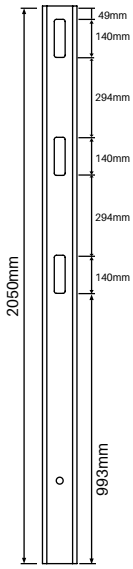

127MM X 127MM

1 way gate post – 3 Rail

2050MM LONG

Order Code: **HF-3RAIL-2050-1WGP**

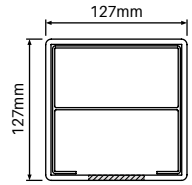

SLOTTED 1 SIDE
INCLUDES ALUMINIUM INSERT

TECH SPECS

- 2050mmH x 127mmW x 127mmD
- 3.8mm wall thickness
- White UV stabilised PVC with protective titanium dioxide additives
- 3x slotted holes for insertion of rails
- Use as hinge post or latch post
- Includes internal 2mm thick aluminium insert entire length of post. Provides post rigidty for hinging/latching from and also, sturdy substrate for fixing of hinges or latch
- Top cap sold separately

Slimline tapered cap

Order Code: **HF-FULLP-STC**

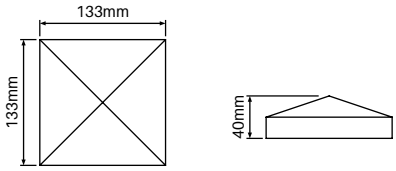

TECH SPECS

- Press on external fit cap
- Slimline tapered cap for minimalist post finishing
- White UV stabilised PVC with protective titanium dioxide additives
- Use silicone for long term binding

Wall/post brackets

3 PACK

Order Code: **HF-3RAIL-WB-3PK**

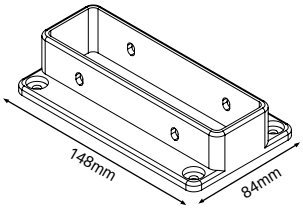

TECH SPECS

- 3 pack of brackets
- Affix to existing post or wall structure to start or end run of 3 rail fencing
- Includes 12x screws for fixing off brackets to top/bottom rails + 12x cover caps to hide screws
- White UV stabilised PVC with protective titanium dioxide additives
- Fixings for screw brackets to post or wall not supplied

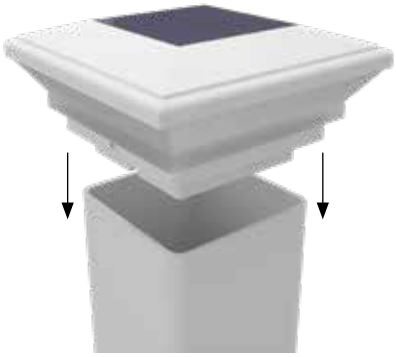

Solar post light

Order Code: **HF-SOLAR-127**

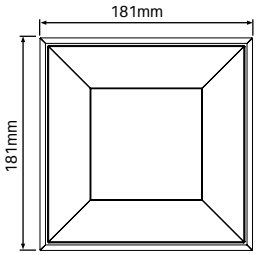

TECH SPECS

- Use solar light instead of standard cap for top 127mmx127mm square posts
- Suits 1 way, 2 way, 90 degree, full and gate posts
- Light automatically turns on when no light source detected. With full charge, light stays on continuously for approx. 8 hours
- Internal replaceable battery lasts approx. 1.5 years. Easy to replace. (2 x Ni-MH AA 1.2V batteries)

** Refer www.productinstall.com.au/hamptons (password: hamptons1) for guidance on install of solar light and replacement of batteries.*

Images & drawings are not to scale

3 RAIL FENCING – GATE ASSEMBLY GUIDE

Material List

Item	QTY
Top Cap	2
1300mmH Gate Side Frame	2
1783mmW Horizontal Rails Top & Mid	2
1783mmW Horizontal Rail with Aluminium Insert	1
1950mmW Cross Member	1
16mm Small Plugs	2
50mm Screws	6
25mm Screws	6
20mm Screws	2

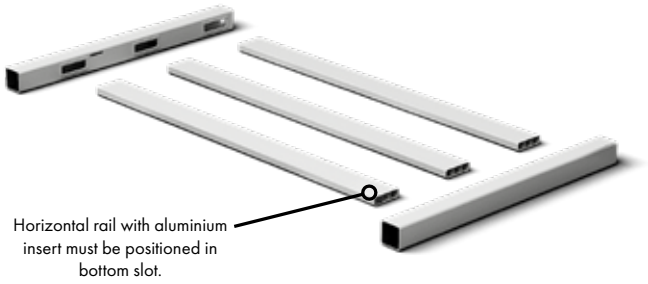

IF ADJUSTING GATE WIDTH

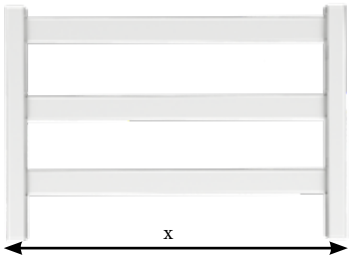

If adjusting gate width: to calculate required horizontal rail length, take gate width 'x' (outer edge to edge of gate side frame) and minus 17mm. e.g. For a gate width of 1400mm, cut 3 x horizontal rails to 1383mm.

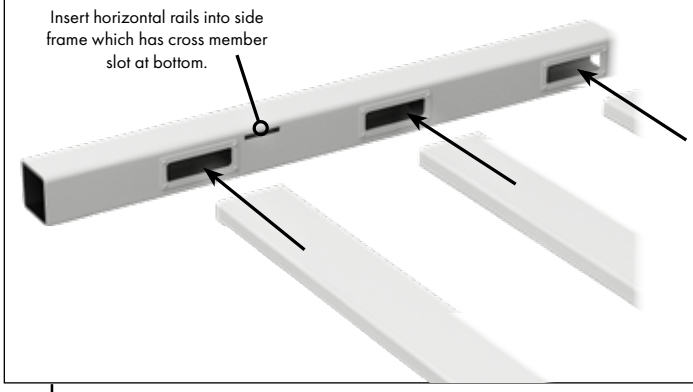

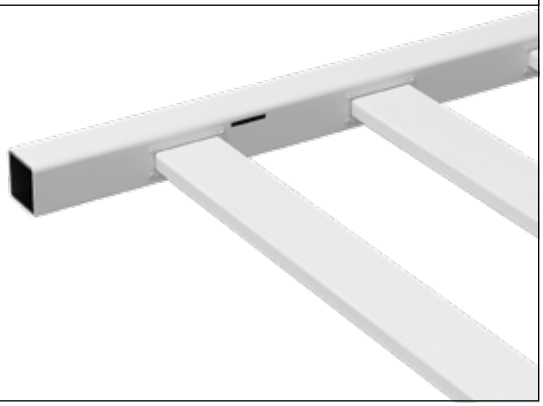

1. Lay out side frames and horizontal rails on a flat bench.
   Insert horizontal rails into 1 side frame ensuring the 1 rail with the aluminium rail insert is at the bottom.
   Push horizontals all the way into the side frame.
   Fit to side frame where cross member slot is at bottom of side frame.
   The assembled gate is 1800mm wide. If a smaller width gate is required, horizontal rails may be cut to size:
   Formula for cutting 3 x rail widths: Gate Width (outer edge to edge of gate side frame) MINUS 17mm.
   e.g Gate width of 1400mm required means cut 3 x horizontal rails to 1383mm
   (NOTE: bottom rail has aluminium insert – use a blade suitable for cutting aluminium)

3 RAIL FENCING – GATE ASSEMBLY GUIDE

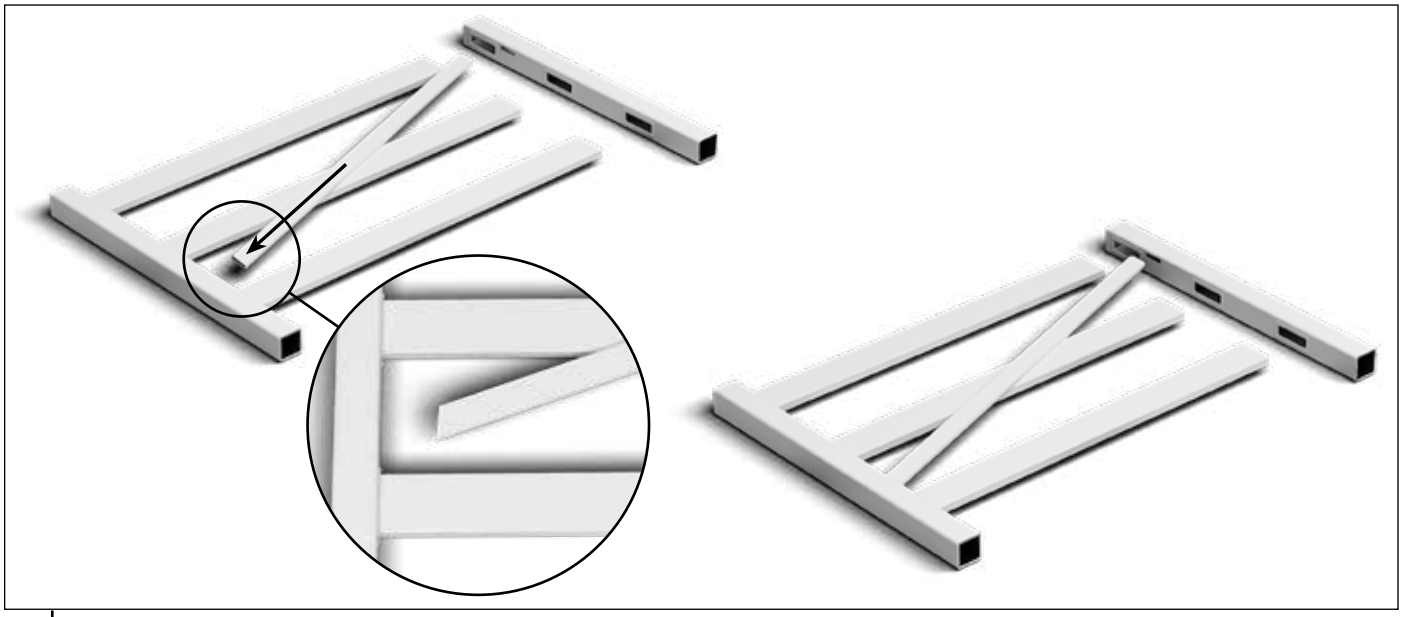

2 Insert cross member into the gate side frame at bottom side (same side frame that horizontal rails have already been inserted).
If gate width to remain at 1800mm, no adjustment to cross member required.
If gate width adjustment required, insert cross rail into bottom slot hole only and refer to Step 3.
NOTE: ensure cross member slot is at bottom of side frame.

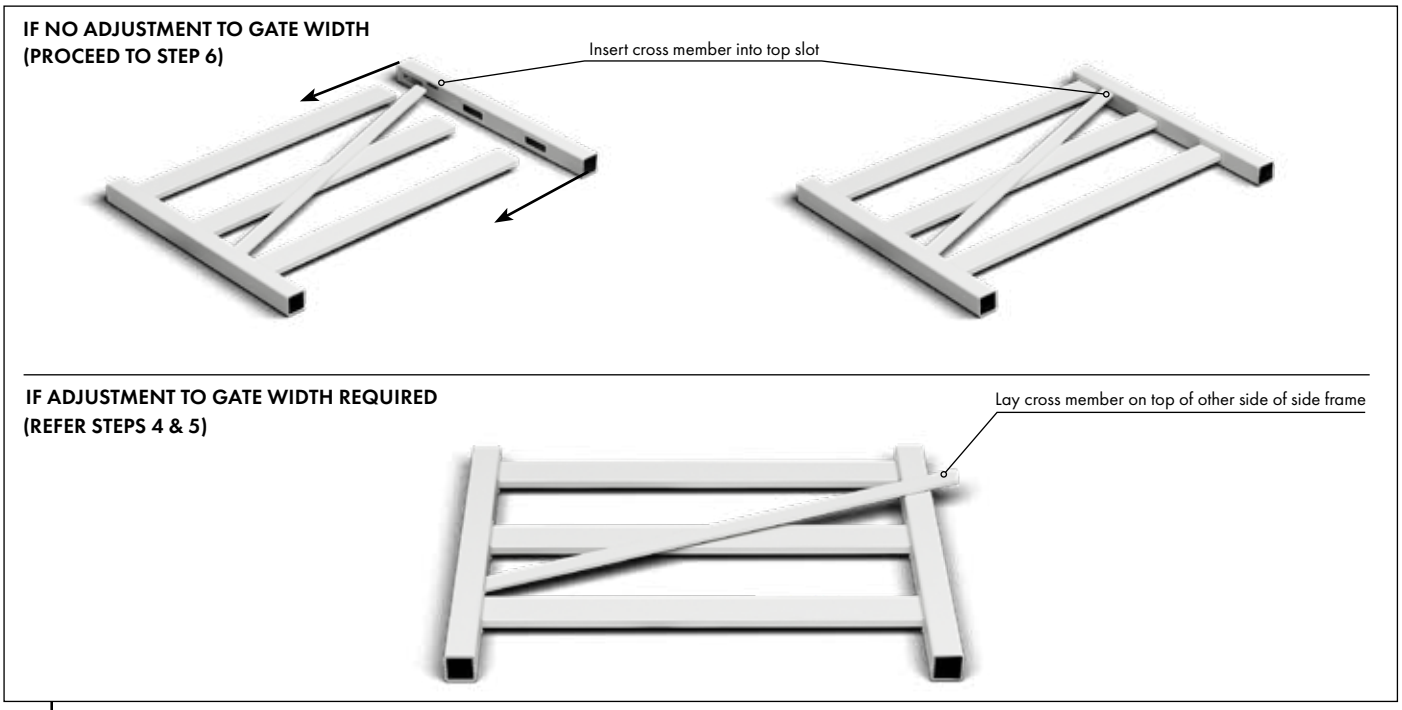

3 **If gate width remaining at 1800mm wide:**
Insert horizontal rails and cross member into other side frame.
Ensure horizontal rails are pushed all the way in.
Proceed to Step 6.

If gate width to be adjusted:
Insert 3 x horizontal rails into gate side frame and position cross member to lay in position above slot hole then refer Step 4

3 RAIL FENCING – GATE ASSEMBLY GUIDE

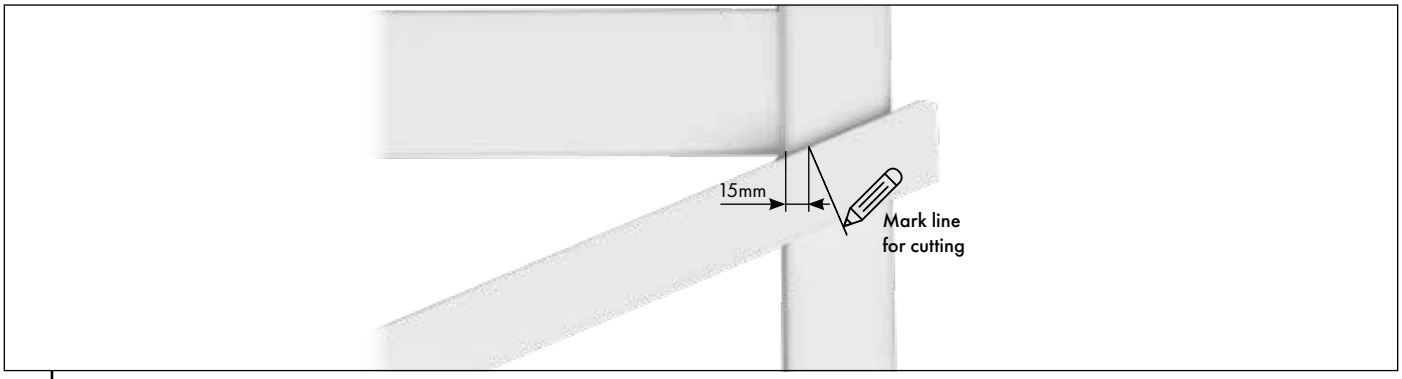

4 **Only applies if gate width to be adjusted.**
Position cross member to where it would fit into required slot but rest of top of gate side frame.
Ensure horizontal rails are fully pushed in on both sides and cross member is fully pushed in on inserted side.
On cross member, mark where gate side frame meets and then measure and mark 15mm in.

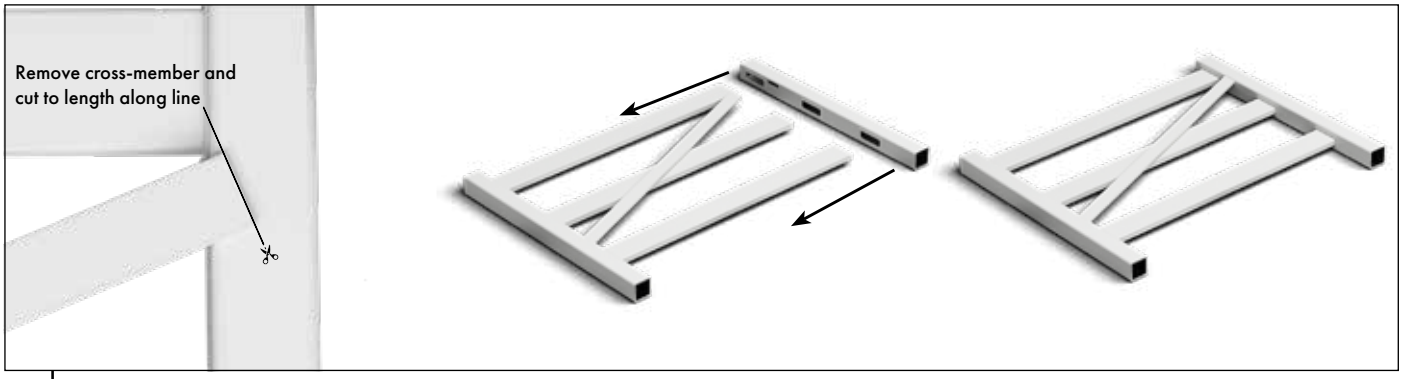

5 **Only applies if gate width adjusted.**
Remove cross member and cut the marked side only using drop-saw or hand-saw.
Remove gate side frame from this side only and re-install the 3 x horizontal rails and cross member into slot holes on gate side frame.

IMPORTANT NOTE: ** IF GATE WIDTH 1200mm OR LESS: The angle of the cross member increases the shorter the width. The slot holes in the side frames will need to be made slightly larger in height due to the increased angle. A standard small hand-saw may be used to increase slot hole size as required.

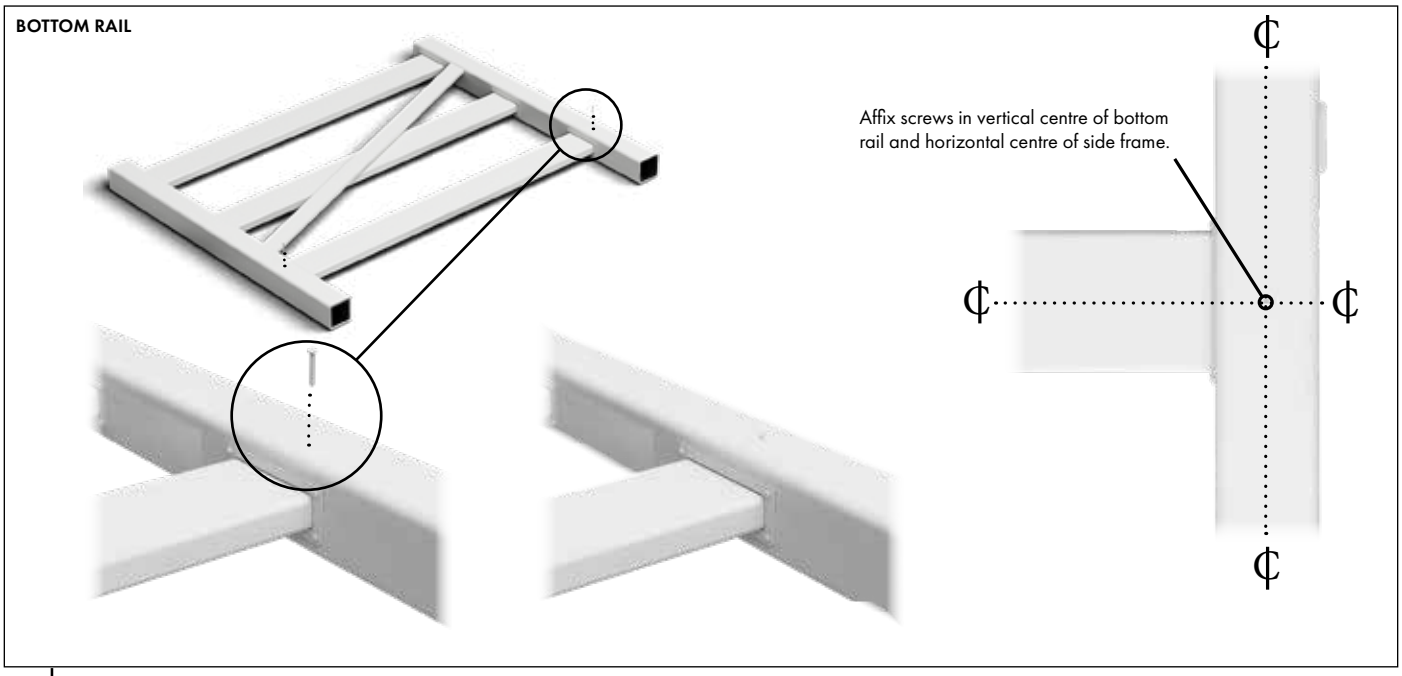

6 Ensure gate square. **TIP** – measure diagonals ensuring the same measurement.
Screw fix off bottom rail through gate side frames using 1 x 50mm screw each side.
Affix both sides at midpoint of bottom rail height and centre of post.

3 RAIL FENCING – GATE ASSEMBLY GUIDE

7 Screw top rail into place inside side frame using 3 x 25mm screws.
Top plate is supplied fixed in position in side frame with holes pre-drilled for fixing through. Repeat on other side.

8 Cross member requires fixing off to middle horizontal rail.
Where the cross member intersects the middle horizontal rail, drill 2 x 16mm holes through front surface of cross member only.
Through the 2 x holes, screw the bottom surface of the cross member to the horizontal rail using 2 x 20mm screws

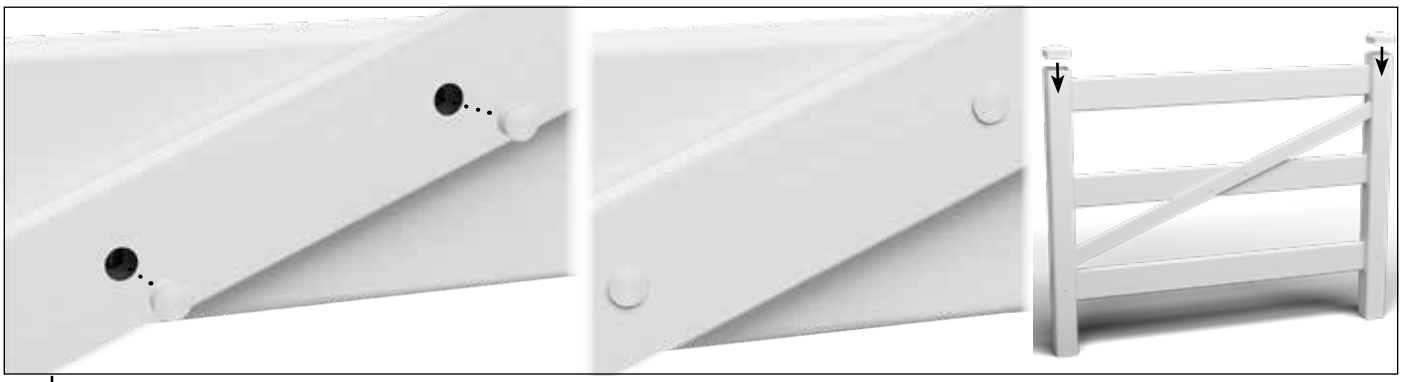

9 Plug the 2 x 16mm holes with large plugs.
Press in both top caps

3 RAIL FENCING – GATE ASSEMBLY GUIDE

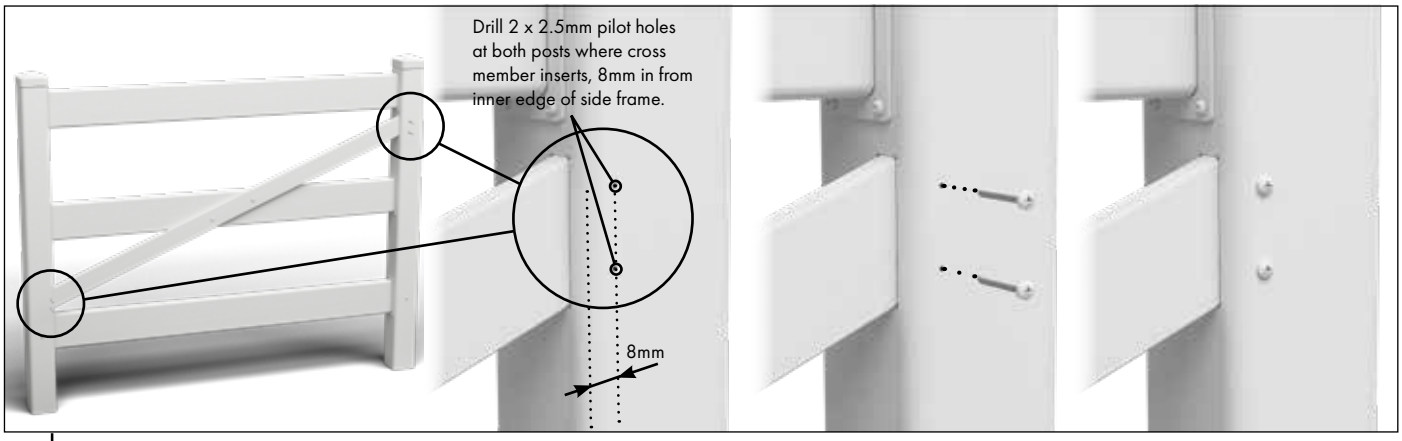

10 The cross member must be fixed off at both ends. Drill 2.5mm pilot holes 8mm in from edge of gate side frame.

Fix off at bottom and top side of cross member using 2 x 50mm screws.

NOTE: Hole positioning must be accurate

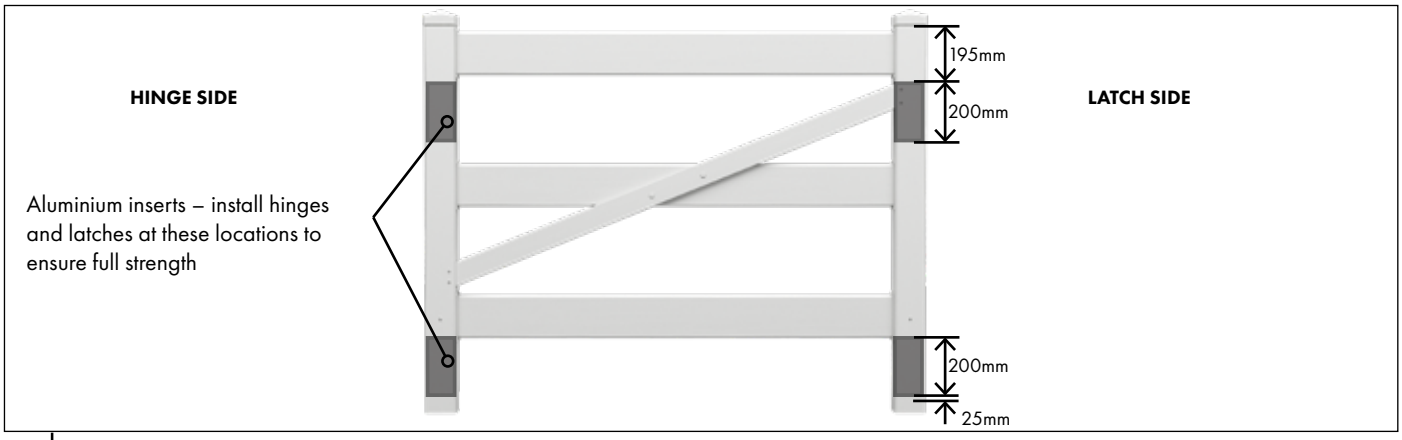

11 **HINGE AND LATCH INSTALL**

Note there are aluminium inserts located for screw fixing of hinge and latches. Position hinge and latches to ensure fixings penetrate PVC frame and also into aluminium inserts.

NOTE: Upon installation, hinges are to be installed to the gate side frame with the cross member at its lowest point.

VERTICAL PALING FENCING

WHILE STOCKS LAST

VERTICAL PALING FENCING...

glass outlet

STYLE 1

1800mm high with midrail centre

STYLE 2

1800mm high with midrail 3/4 up

STYLE 3

Under 1500mm high with no midrail

STYLE 4

Under 1500mm high picket with points level

STYLE 5

Under 1500mm high pickets with points starting higher both sides

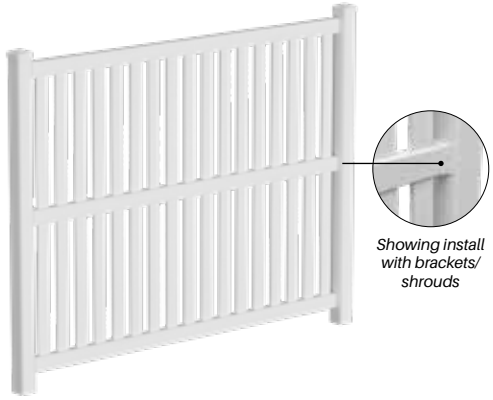

Showing install with brackets/ shrouds

FOR 1800MM HIGH INSTALLATION (MIDRAIL AT MIDPOINT)

- Suits existing routed slots in posts for bottom rail and top rail
- Requires midrail: route slots in posts OR install with shrouds

FOR INSTALLATIONS LESS THAN 1800MM HIGH

- The pre-routed post slots for top and bottom rails cannot be used with height adjusted panels.
- 2 ways for installation of height adjusted panels:

METHOD 1

– Use existing pre-routed slot for top rail.
– Route new bottom rail slot which suits new panel installation height
– For midrail, route slots at midpoint position OR use shrouds
– Cut vertical palings to required height

METHOD 2

– Use 2100mm high FULL post (with no slot holes)
– Install top, bottom and midrail using shrouds only
– Cut vertical palings to required height

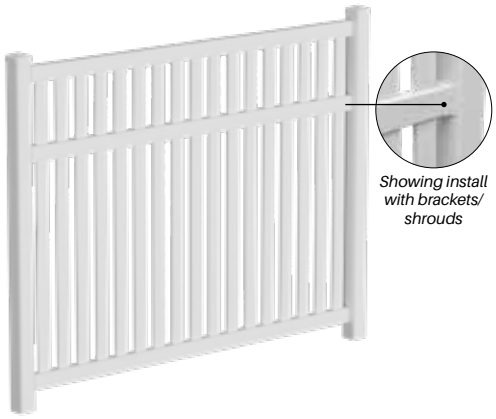

Showing install with brackets/ shrouds

FOR 1800MM HIGH INSTALLATION (MIDRAIL 3/4 UP)

- Suits existing routed slots in posts for bottom rail and top rail
- Requires midrail: route slots in posts OR install with shrouds

FOR INSTALLATIONS LESS THAN 1800MM HIGH

- The pre-routed post slots for top and bottom rails cannot be used with height adjusted panels.
- 2 ways for installation of height adjusted panels:

METHOD 1

– Use existing pre-routed slot for top rail.
– Route new bottom rail slot which suits new panel installation height
– For midrail, route slots at desired position OR use shrouds
– Cut vertical palings to required height

METHOD 2

– Use 2100mm high FULL post (with no slot holes)
– Install top, bottom and midrail using shrouds only
– Cut vertical palings to required height

Showing install with brackets/ shrouds

FOR INSTALLATIONS UNDER 1500MM HIGH – (NO MIDRAIL)

- The pre-routed post slots for top and bottom rails cannot be used with height adjusted panels.
- 2 ways for installation of height adjusted panels:

METHOD 1

– Use existing pre-routed slot for top rail.
– Route new bottom rail slot to suit new panel installation height
– Cut vertical palings to required height

METHOD 2

– Use 2100mm high FULL post (with no slot holes)
– Install top and bottom rail using shrouds only
– Cut vertical palings to required height

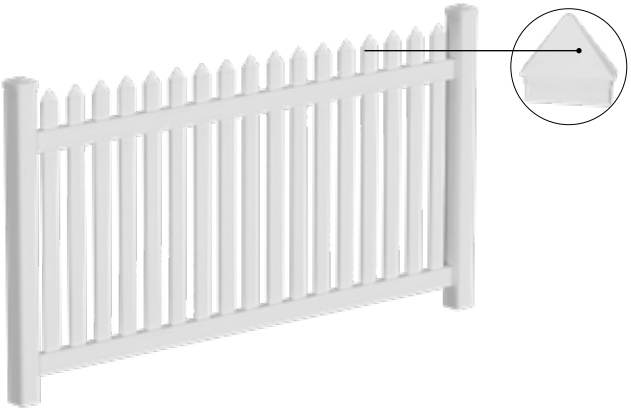

PICKET TOP VERTICAL PALING FENCING

- The pre-routed post slots for top and bottom rails cannot be used with height adjusted panels.
- 2 ways for installation of height adjusted panels:

METHOD 1

– Use existing pre-routed slot at bottom of post. Adjust height from top of post cutting off existing top slot and route new slot at desired height. Discard toprail in kit. Purchase midrail and use as top rail (palings pass through)
– For routing of new top slot, use jig to route at required height
– Cut palings to required height and press in triangular pointed toppers

METHOD 2

– Use 2100mm high FULL post (with no slot holes)
– Install bottom rail and top (punched) rail using shrouds only
– Cut palings to required height and press in triangular pointed toppers

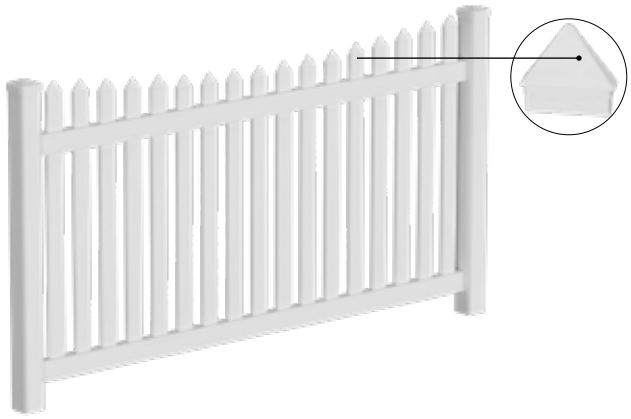

PICKET TOP VERTICAL PALING FENCING

- The pre-routed post slots for top and bottom rails cannot be used with height adjusted panels.
- 2 ways for installation of height adjusted panels:

METHOD 1

– Use existing pre-routed slot at bottom of post. Adjust height from top of post cutting off existing top slot and route new slot at desired height. Discard toprail in kit. Purchase midrail and use as top rail (palings pass through)
– For routing of new top slot, use jig to route at required height
– Cut palings to required height and press in triangular pointed toppers

METHOD 2

– Use 2100mm high FULL post (with no slot holes)
– Install bottom rail and top (punched) rail using shrouds only
– Cut palings to required height and press in triangular pointed toppers

glass outlet

VERTICAL PALING FENCING

Vertical paling semi privacy panel kit

2388MM WIDE
1800MM HIGH

Order Code: **HF-VERTP-PANEL**

- Flat pack kit in a box – easy assembly
- White UV stabilised PVC with protective titanium dioxide additives

IDEAL FOR FRONT/ BOUNDARY FENCING

TECH SPECS

- Top rail: 2388mmW x 89mmH x 51mmD; 2.8mm wall thickness
- Bottom rail: 2388mmW x 89mmH x 51mmD; 2.8mm wall thickness with aluminium insert
- Palings: 1690mmH x 76mmW x 22mmD
- Achieves overall panel height of 1800mm
- 58.5mm gap between palings
- Palings easily insert into punched rails

*** Optional extra midrail sold separately. Midrail required for installations with fence heights from 1500mm up to 1800mm high. Refer page 79 for guidance on midrail installation.*

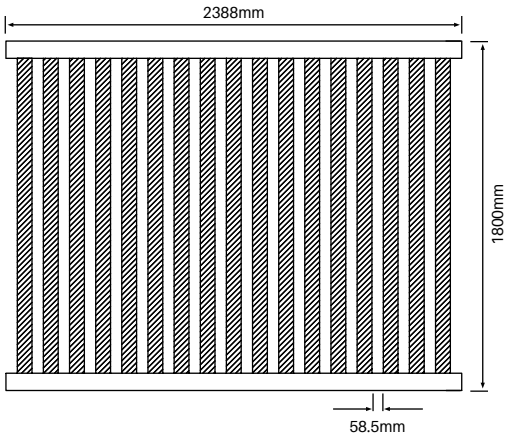

NOTE
Height & width adjustable panel

KIT INCLUSIONS

- 1x punched top rail (2388mm W)
- 1x punched bottom rail (2388mm W) w/ aluminium insert
- 17 x vertical palings 76mm wide (1690mm H)

VERTICAL PALING FENCING

GATE KIT INCLUSIONS

- 1x punched top rail (1190mm W)
- 1x punched bottom rail (1190mm W) w/ aluminium insert
- 2 x gate side stiles (1850mm H)
- 7 x vertical palings 76mm wide (1690mm H)
- 2 x gate frame caps
- 12 x SS304 assembly screws with cover caps
- 4 x aluminium internal rigidity inserts

Vertical paling gate

1205MM WIDE
1850MM HIGH

Order Code: **HF-VERTP-GATE**

- Flat pack in a box ready for assembly
- Includes 2x top caps & screws for assembly
- Height & width adjustable

TECH SPECS

- Top & Bottom rail: 1190mmW x 89mmH x 51mmD; 2.8mm wall thickness
- Palings: 1690mmH x 76mmW x 22mmD
- Achieves overall panel height of 1850mm (height and width are adjustable)
- 58.5mm gap between palings

*** Optional extra midrail sold separately. Midrail required for installations with gate heights from 1500mm up to 1850mm high. Refer page 79 for guidance on midrail installation.*

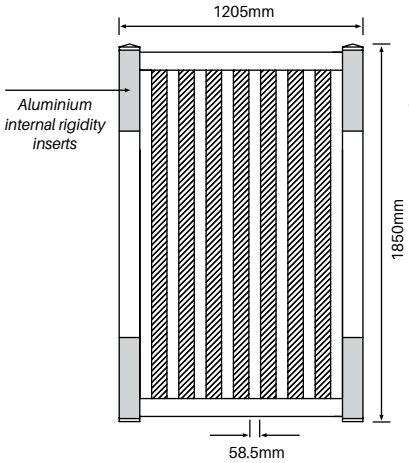

NOTE
Height & width adjustable gate

VERTICAL PALING FENCING

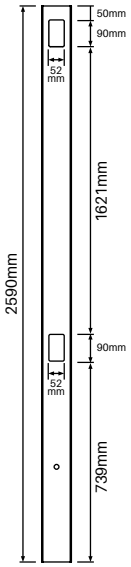

102MM X 102MM

1 way post – Vertical Paling

2590MM LONG

Order Code: **HF-VERTP-2590-1W**

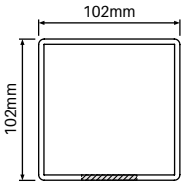

SLOTTED 1 SIDE ONLY

TECH SPECS

- 2590mmH x 102mmW x 102mmD; 3.8mm wall thickness
- White UV stabilised PVC with protective titanium dioxide additives
- Slotted holes for insertion of panel top and bottom rails
- Use as start or finish post
- Top cap sold separately
- Not suitable for hinging or latching a gate. Use Gate Post for that situation (Code HF-VERTP-2590-1WGP)

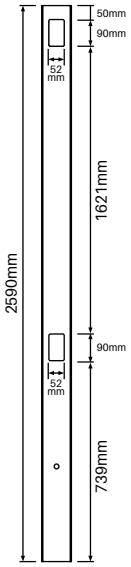

102MM X 102MM

2 way post – Vertical Paling

2590MM LONG

Order Code: **HF-VERTP-2590-2W**

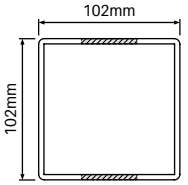

SLOTTED BOTH SIDES

TECH SPECS

- 2590mmH x 102mmW x 102mmD; 3.8mm wall thickness
- White UV stabilised PVC with protective titanium dioxide additives
- Slotted holes both sides of post for insertion of panel top & bottom rails
- Use as inline post for straight fencing run
- Top cap sold separately

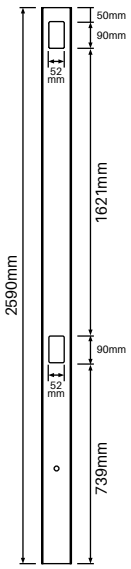

102MM X 102MM

90° post – Vertical Paling

2590MM LONG

Order Code: **HF-VERTP-2590-90**

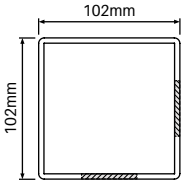

SLOTTED 2 SIDES AT 90^{0}

TECH SPECS

- 2590mmH x 102mmW x 102mmD; 3.8mm wall thickness
- White UV stabilised PVC with protective titanium dioxide additives
- Slotted holes on adjacent sides of post for insertion of panel top & bottom rails
- Use at 90 degree corner
- Top cap sold separately

Images & drawings are not to scale

VERTICAL PALING FENCING

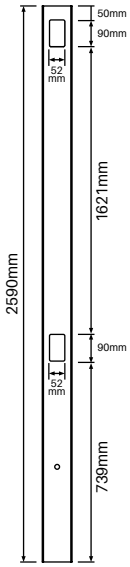

102MM X 102MM

1 way gate post – Vertical Paling

2590MM LONG

Order Code: **HF-VERTP-2590-1WGP**

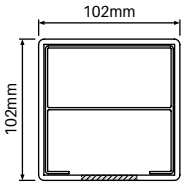

SLOTTED 1 SIDE
INCLUDES ALUMINIUM INSERT

TECH SPECS

- 2590mmH x 102mmW x 102mmD; 3.8mm wall thickness
- White UV stabilised PVC with protective titanium dioxide additives
- Slotted holes for insertion of panel top & bottom rails
- Use as hinge post or latch post
- Includes internal 1.5mm thick aluminium insert entire length of post (ie 2590mm long). Provides post rigidity and also, sturdy substrate for fixing of hinges or latch
- Top cap sold separately

102MM X 102MM

Full post 'No slot holes' – Vertical Paling

2100MM LONG

Order Code: **HF-VERTP-2100-FP**

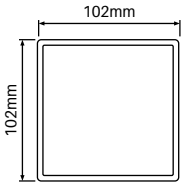

NO SLOT HOLES

TECH SPECS

- 2100mmH x 102mmW x 102mmD; 3.8mm wall thickness
- White UV stabilised PVC with protective titanium dioxide additives
- No slot holes – cut slot holes wherever needed or affix brackets
- Use hole cutting jig (code: HF-VERTP-JIG) to assist routing holes if required or use method shown on pg 52
- Ideal for height adjusted panels where slot hole positions are different to standard posts with pre-routed holes
- Brackets may also be affixed to post for holding panel top/bottom rails (code: HF-VERTP-WB-2PK) – an easy alternative to routing slot holes
- Useful for panels with sloping ground for stepping panels

89MM H x 51MM D

Midrail – Vertical Paling

2388MM WIDE

Order Code: **HF-VERTP-MR**

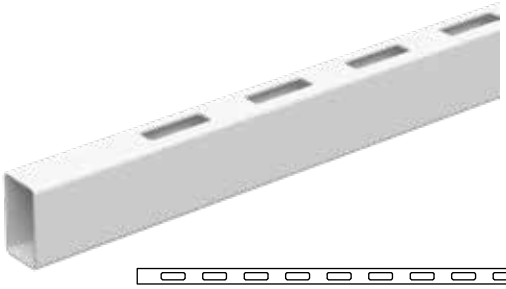

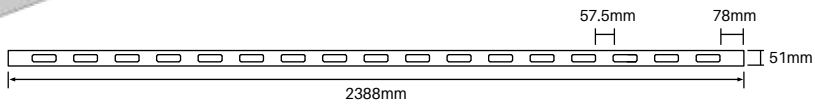

TECH SPECS

- 2388mmW x 89mmH x 51mmD 2.8mm wall thickness
- 17 x punched holes through top & bottom at 57.5mm gap spacing
- Vertical palings pass through midrail
- Midrail required for fences & gates from 1500mm H to 1800mm H to provide rigidity to vertical palings. Optional for fence/gate heights under 1500mm
- **For FENCE POSTS:** route holes using jig (CODE: HF-VERTP-JIG) for midrail insertion both sides of posts OR install using brackets/shrouds (CODE: HF-VERTP-WB-2PK) which are affixed to both sides of posts
- **For GATES:** route holes using gate jig (CODE: HF-VERTP-JIG-GATE) for midrail insertion. Brackets/shrouds cannot be used as gate stiles are not wide enough to accommodate brackets

Images & drawings are not to scale

VERTICAL PALING FENCING

Concealed base plate

616MM HIGH

Order Code: **HF-SEMIP-BP**

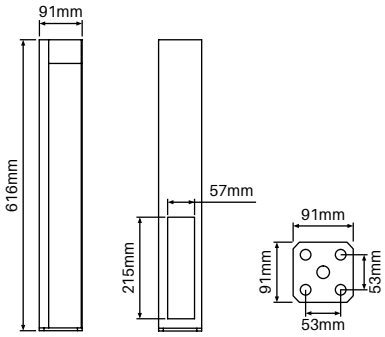

TECH SPECS

- Internal fitting base plate suits 1 way, 2 way and 90 degree posts. Not suitable for use with 1 way 'gate' post
- 6mm thick base plate with 2mm thick vertical walls
- Cold-galvanized steel provides strong corrosion resistance
- 4 x fixing holes in base plate
- Post sleeves over base plate and fixes to internal base plate with tek screws. Use 2 part domical cover to hide screw fixings
- Base plate system not suitable for use where wind load considerations required
- **Refer install guide on page 54** for fitting information

HEAVY DUTY

Concealed base plate

1150MM HIGH

Order Code: **HF-SEMIP-BP-1150**

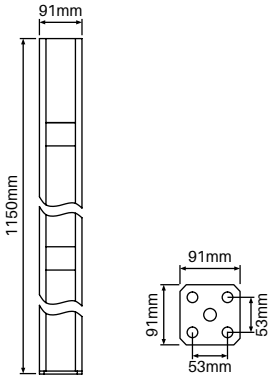

TECH SPECS

- Internal fitting base plate suits 1 way post.
- Enables base plate fitting of 1 way post for use as a hinge and/or latch post
- 6mm thick base plate with 2mm thick vertical walls.
- 1150mm high vertical walls provide post rigidity also, sturdy substrate for fixing of hinges and/or latch
- Cold-galvanized steel provides strong corrosion resistance
- 4 x fixing holes in base plate
- Post sleeves over base plate and fixes to internal base plate with tek screws. Use 2 part domical cover to hide screw fixings
- Base plate system not suitable for use where wind load considerations required

Hole cutting jig

Order Code: **HF-SEMIP-JIG**

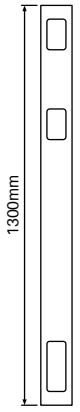

Do NOT use bottom larger hole. This guide hole is used for a different fence system.

TECH SPECS

- Made from SS304
- Jig provides slot hole required in 102x102mm post for top, bottom or midrail insertion
- New post slot holes may be required if stepping panels for sloping ground or if panels are height adjusted requiring change of distance between standard post slot holes
- Jig suits use with 6.35mm 1/4" trimmer with 16mm diameter guide (eg Makita DRT50ZJX2 trimmer)

NOTE: Routing of slots can be achieved without jig and trimmer. Refer pg 80 for alternative method.

Images & drawings are not to scale

VERTICAL PALING FENCING

Only use for cutting slot holes in gate side frames.

Hole cutting jig – For gate midrail

Order Code: **HF-VERTP-JIG-GATE**

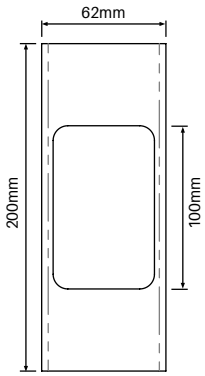

TECH SPECS

- Made from SS304
- Jig provides slot hole required if installing a MIDRAIL with a GATE. Midrail recommended for gates 1500mm high up to 1800mm high.
- Gate side stiles are 65.5x102mm profile so special gate jig is required.
- Jig suits use with 6.35mm 1/4" trimmer with 16mm diameter guide (eg Makita DRT50ZJX2 trimmer)

NOTE: Routing of slots can be achieved without jig and trimmer. See page 80 for alternative method.

Wall/post brackets

2 PACK

Order Code: **HF-VERTP-WB-2PK**

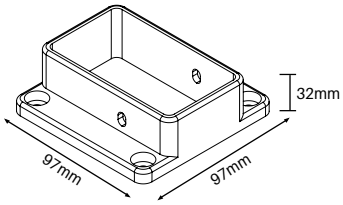

TECH SPECS

- 2 pack of brackets – suits top & bottom rails. Also suits (optional) midrail
- Affix brackets to post or wall
- Includes 4 x screws for fixing off brackets to top/bottom rails + 8 x cover caps to hide screws
- White UV stabilised PVC with protective titanium dioxide additives
- Fixings not supplied for screwing brackets to post or wall

Hamptons fencing tool

Order Code: **HF-TOOL**

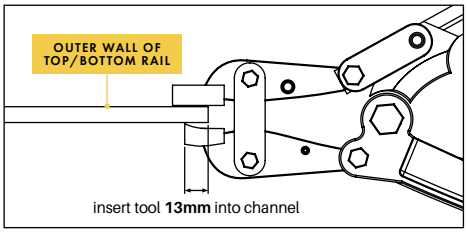

TECH SPECS

- Tool creates a protruding flap/tag at the end of the horizontal top, mid & bottom rail which prevents the rail pulling out from slots in posts
- Specially designed tooling in jaw creates the protruding flap/tag

HOW TO USE

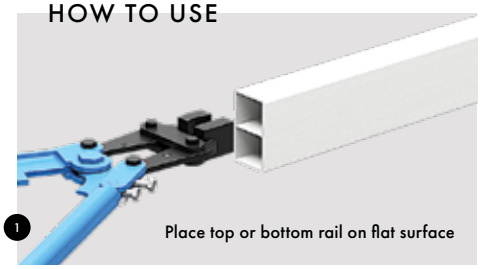

1 Place top or bottom rail on flat surface

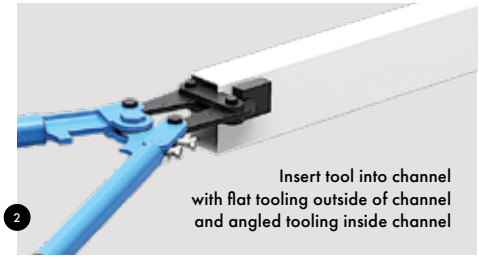

2 Insert tool into channel with flat tooling outside of channel and angled tooling inside channel

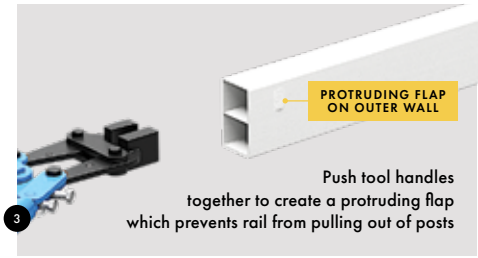

3 Push tool handles together to create a protruding flap which prevents rail from pulling out of posts

Images & drawings are not to scale

VERTICAL PALING FENCING

2 part domical cover

Order Code: **HF-SEMIP-DC**

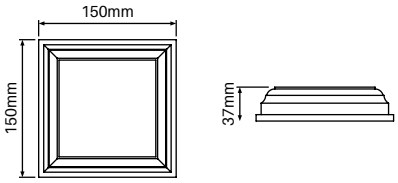

TECH SPECS

- 2 part domical cover – suits 102x102mm post
- Can be fitted after post and panels are installed. 2 parts neatly clip together
- White UV stabilised PVC with protective titanium dioxide additives
- Provides a stylish post finish

English style cap

Order Code: **HF-SEMIP-EC**

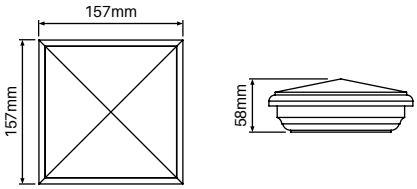

TECH SPECS

- Press on external fit cap
- 'English' style cap with tapered top provides a decorative finish
- White UV stabilised PVC with protective titanium dioxide additives
- Use silicone for long term binding

Slimline tapered cap

Order Code: **HF-SEMIP-STC**

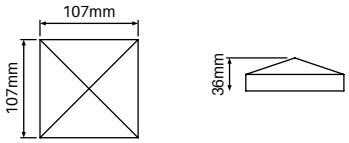

TECH SPECS

- Press on external fit cap
- Slimline tapered cap for minimalist post finishing
- White UV stabilised PVC with protective titanium dioxide additives
- Use silicone for long term binding

Triangular Paling Toppers

5 PACK

Order Code: **HF-VERTP-PT-5PK**

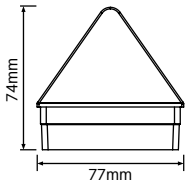

TECH SPECS

- Press in fitting
- 5 x toppers per pack
- Provides the look of traditional timber paling fencing
- White UV stabilised PVC with protective titanium dioxide additives
- When inserting into vertical palings, use silicone for long term binding

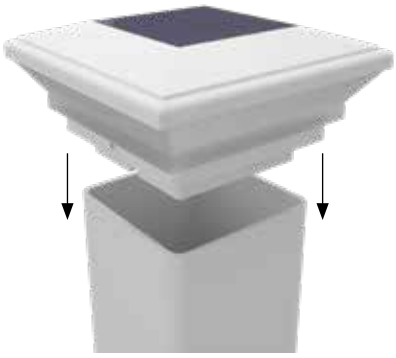

Solar post light

Order Code: **HF-SOLAR-102**

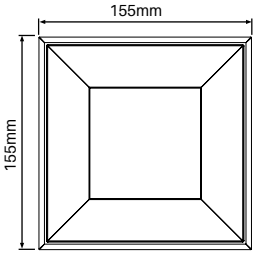

TECH SPECS

- Use solar light instead of standard cap for top of 102mmx102mm square posts
- Suits 1 way, 2 way, 90 degree, full and gate posts
- Light automatically turns on when no light source detected. With full charge, light stays on continuously for approx. 8 hours
- Internal replaceable battery lasts approx. 1.5 years. Easy to replace. (2 x Ni-MH AA 1.2V batteries)

** Refer www.productinstall.com.au/hamptons (password: hamptons1) for guidance on install of solar light and replacement of batteries.*

Images & drawings are not to scale

VERTICAL PALING FENCING

Post plugs

4 PACK
White finish
Order code: **SS-POSTPLUG-4PK-W**

- Ø32mm outer top suits 25mm hole
- Ideal for covering hole in post when affixing post to wall with inner fixing
- Suits post wall thickness 1.5mm – 3.2mm

1 Drill a 25mm diameter hole through front wall of post

2 Drill rear wall of post with required diameter for fixing and then fix post to wall. Insert appropriate fixing into the wall for affixing post

4 Repeat the process as required

**Black plug shown in imagery above. Plugs supplied are white.*

Self drilling tek screws

12Gx20mm – BAG OF 100
Order Code: **SS-TS-100-B (Black)**
SS-TS-100-W (White)

- Self drilling tek screw featuring integrated thread and drill/cutting tip
- 12G x 20mm tek screw with hex head
- Packed in convenient bags of 100 screws

glass outlet

VERTICAL PALING GATE

GATE FABRICATION OVERVIEW

FOR FULLY FRAMED GATES

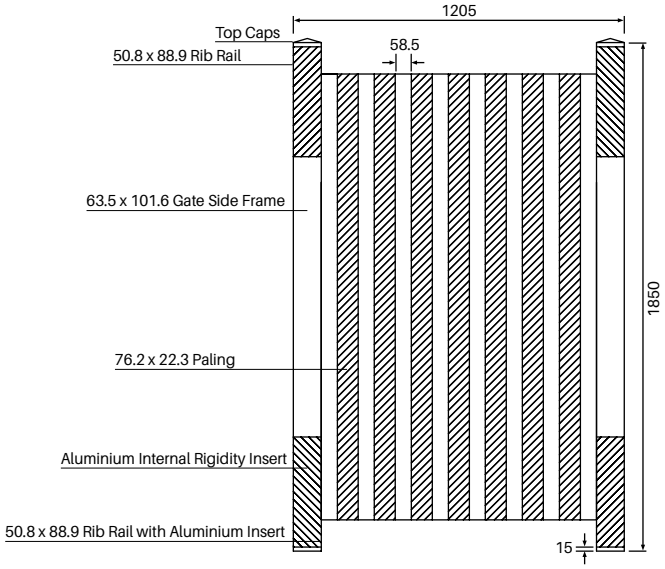

**midrail (sold separately) required for gate heights 1500mm up to 1850mm. Midrail is optional for gates under 1500mm high.

FOR PICKET-TOP GATE

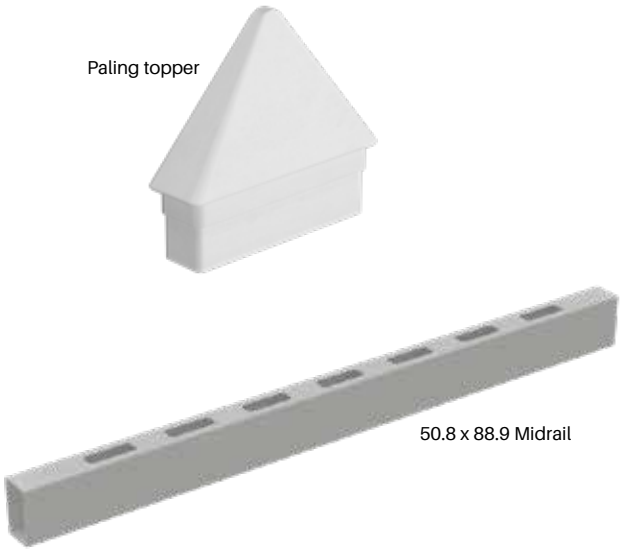

*** Use a Midrail (sold separately) as a top rail and discard the Gate Top Rail supplied in the gate kit.
**** Triangular paling toppers sold separately.

VERTICAL PALING GATE

GATE FABRICATION OVERVIEW

FOR WIDTH ADJUSTMENT / MIDRAIL INCLUSION

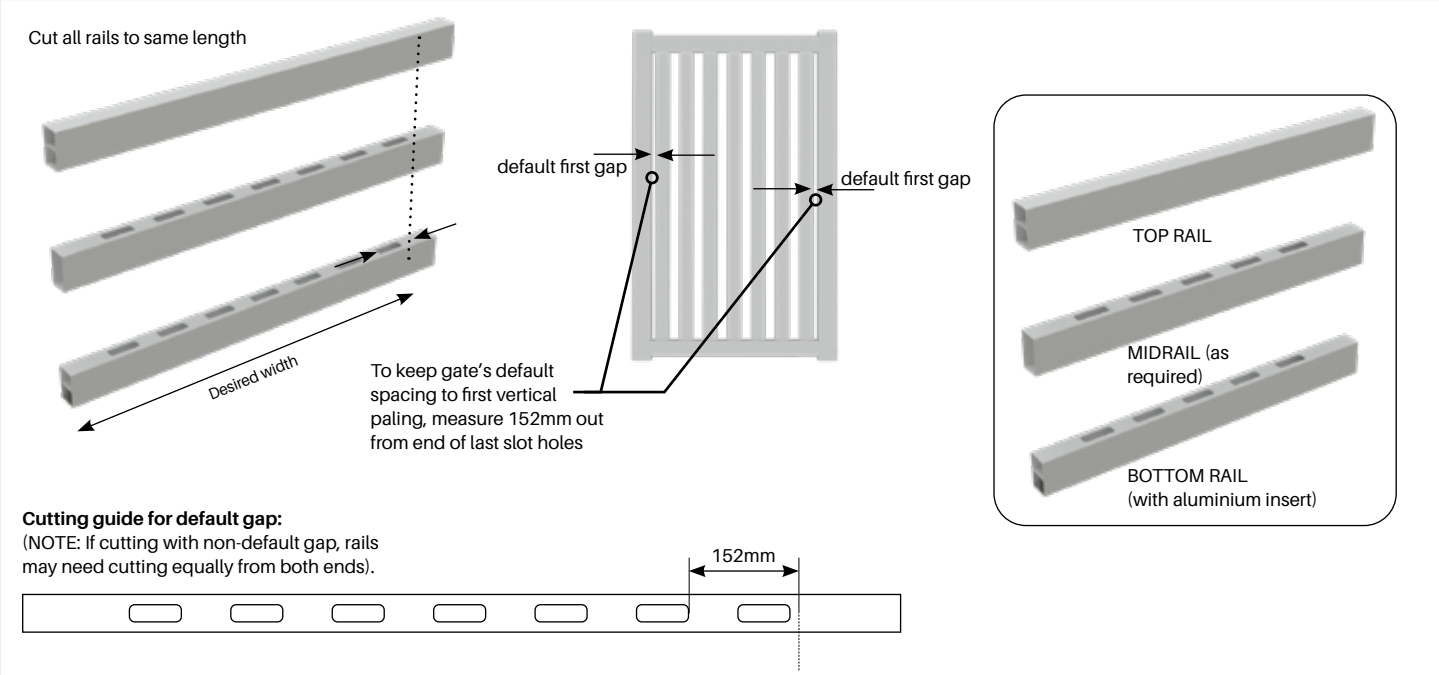

1 Measure and mark out lengths required for top/bottom rails (and mid-rails if applicable), ensuring all rails will be cut to equal length.
For optimal rigidity, allow for top/bottom/mid rails to insert fully into gate side frames, butting up against the aluminium internal rigidity insert.
Cutting 152mm each side from slat entrance point will allow for 94mm of rail insertion and maintaining factory defined-gap between outer pickets and gate side frames.
This gap can be changed as required but too small or large gaps may be aesthetically undesirable.
Cut from both ends an equal amount.

FOR MID-RAILS AND HEIGHT ADJUSTMENT - NEW SLOT HOLES REQUIRED

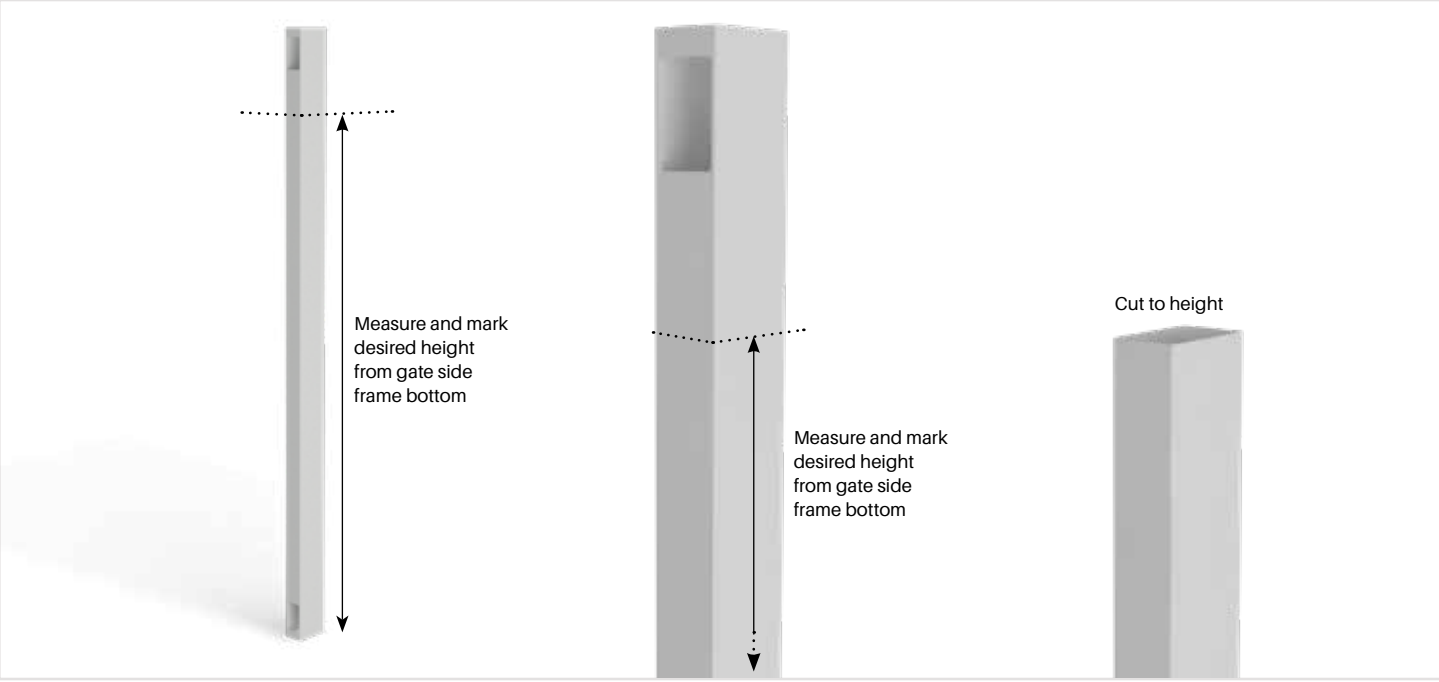

2 A new top slot is required for the gate top rail if adjusting height of gate. Use option 2a OR option 2b to create slot.
Measure and mark out desired height of post. Cut to size using appropriate dropsaw or handsaw.
NOTE: Due to the existing top cut-out, heights from 1849mm – 1736mm are not possible. The maximum height adjusted gate is 1735mm.
MIDRAIL: If installing a MIDRAIL, a slot hole must be created at the desired height. Use option 2a OR option 2b to create slot.

Images & drawings are not to scale

VERTICAL PALING GATE

GATE FABRICATION OVERVIEW

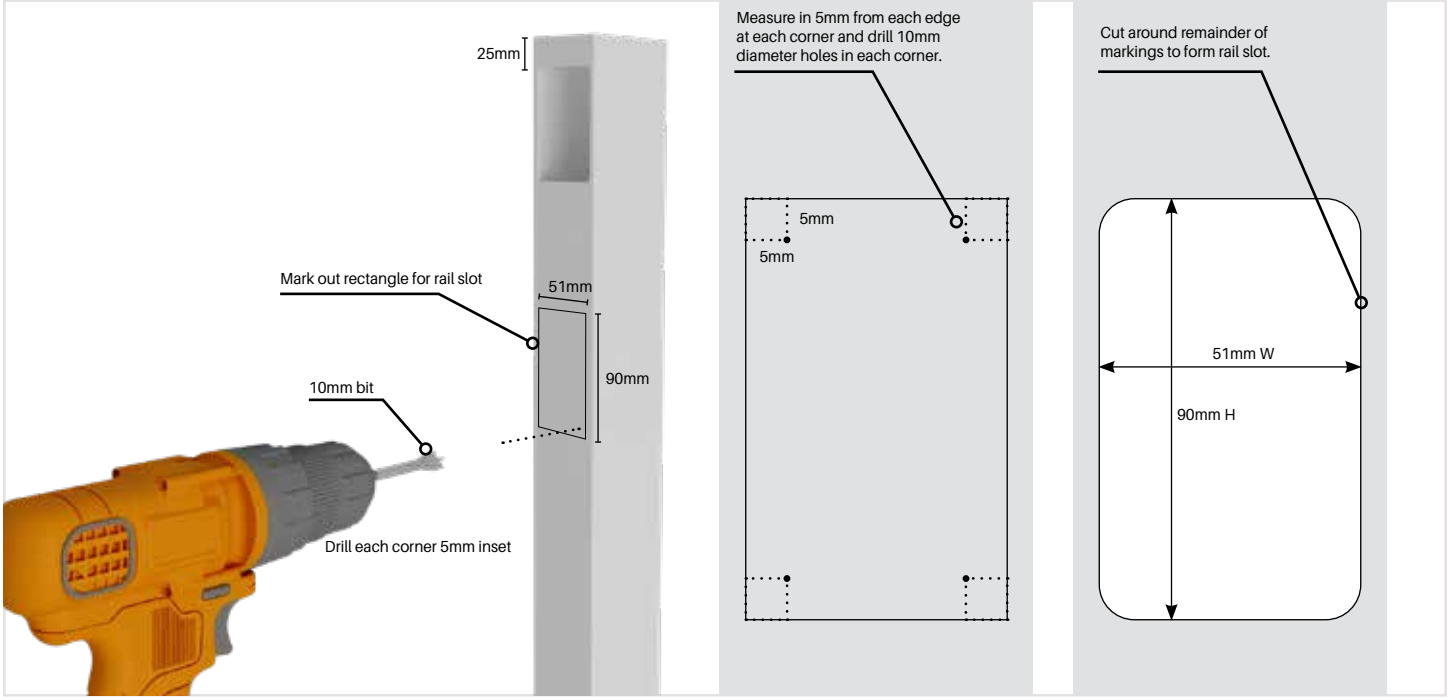

2a Adding new slot for mid-rail and/or top rail:
Method a) Measure and mark out a rectangle 90mm high by 51mm wide for mid or top rail at desired position. Measure and mark a point 5mm in from top or bottom and side in each corner. Drill out these points using a 10mm drill-bit/spade-bit/hole-saw. Cut out along internal lines using a wall-saw or jigsaw to form remainder of hole. Finish with a smooth file.

ADJUSTMENT TIPS:

- For Fully framed gates, it is recommended to position the top rail slot 25mm down from top of post.
- For Picket Top gates, position the top rail slot at desired height, using the (sold separately) Midrail as the top rail, discarding the Top Rail included in the gate kit.

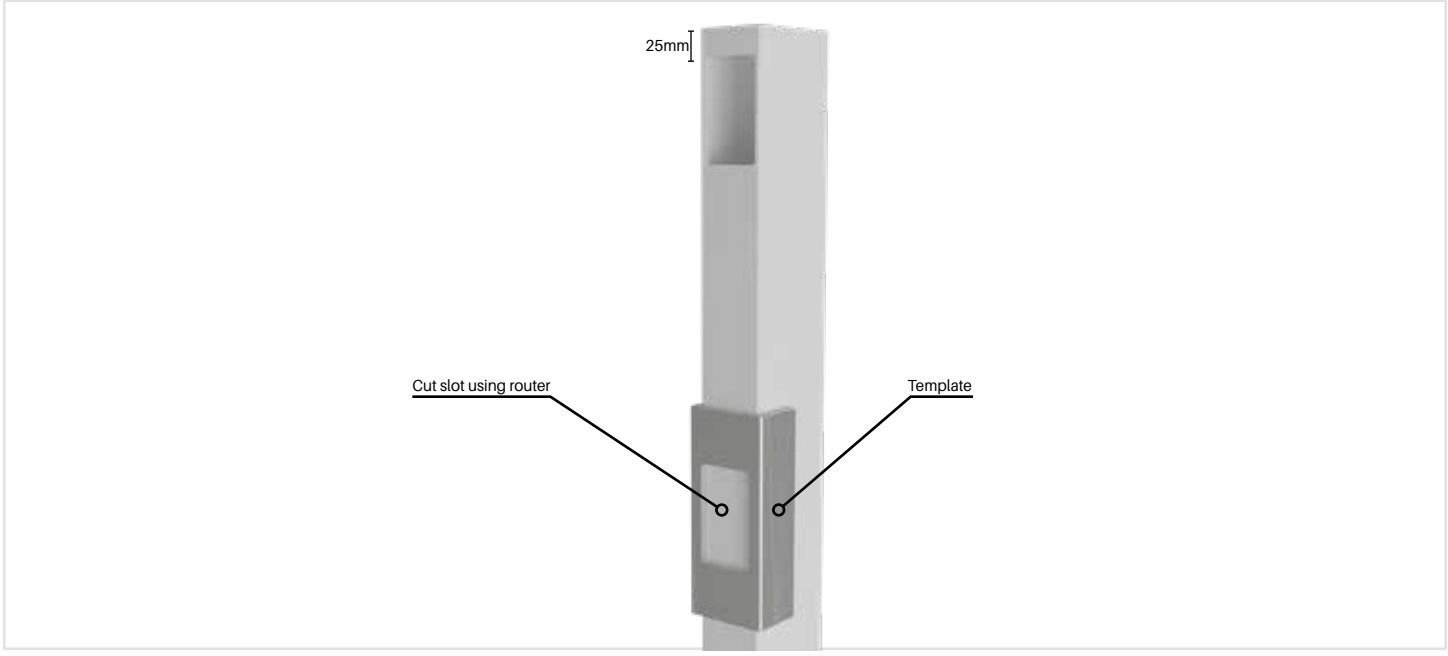

2b Adding new slot for mid-rail and/or top rail:
Method b) Measure and mark out the required position of mid/top rail. Position the shroud-template into position and use a router to cut the hole.
*** Jig suits a 6.35mm (¼") trimmer with 16mm diameter guide (e.g Makita DRT50ZJX2 trimmer) ***

ADJUSTMENT TIPS:

- For Fully framed gates, it is recommended to position the top rail slot 25mm down from top of post.
- For Picket Top gates, position the top rail slot at desired height (using the sold separately Midrail as the top rail, discarding the Top Rail included in the gate kit).

VERTICAL PALING GATE

GATE FABRICATION OVERVIEW

GATE ASSEMBLY

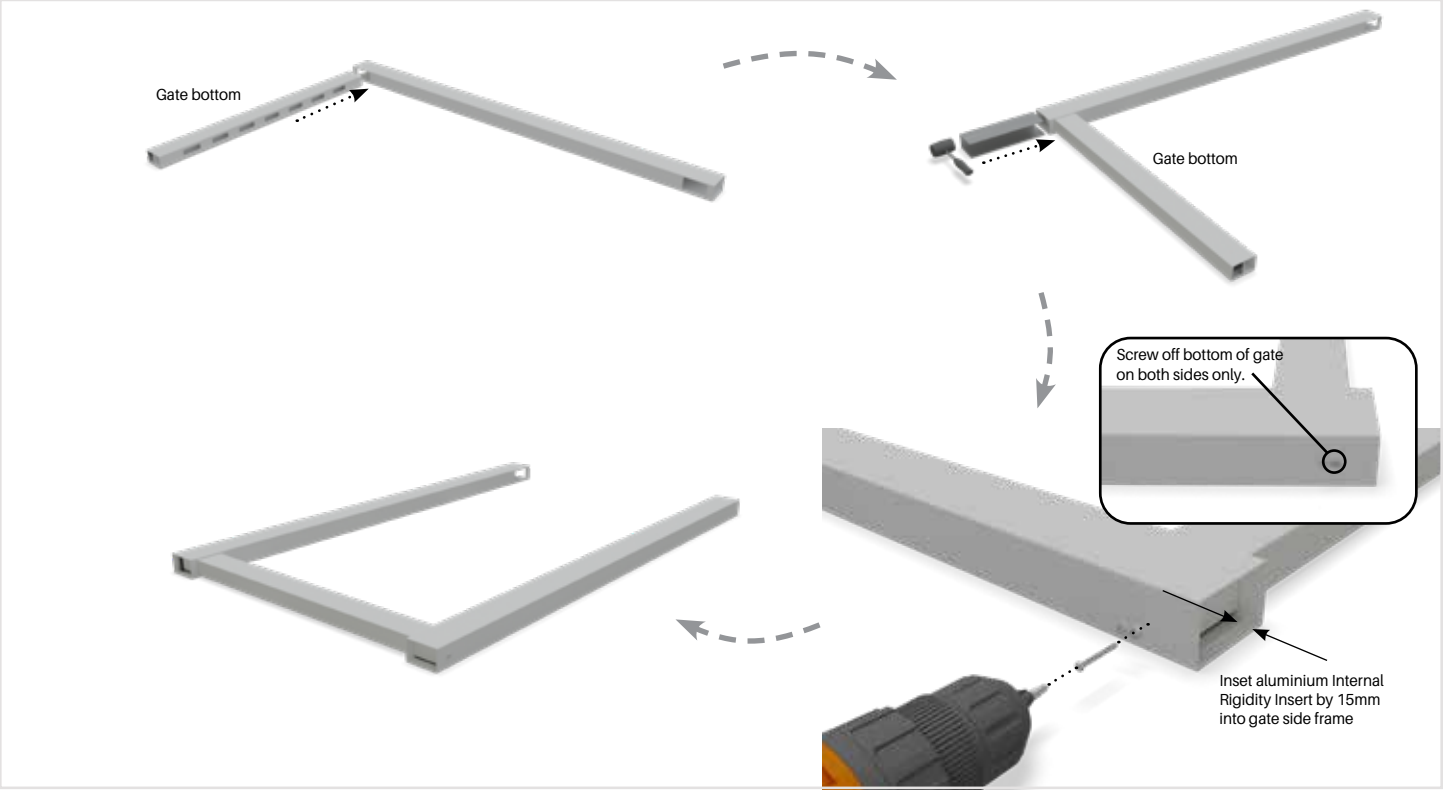

3 Insert bottom rail (with aluminium insert) into gate side frame slot. Insert half way into slot depth. Using mallet, insert aluminium Internal Rigidity Insert into side frame embedding approx 15mm inside and secure with screw including collar and snap-cap. Then insert bottom rail fully inside gate side frame, butting up against aluminium. Repeat process both sides.

GATE ASSEMBLY WITH MIDRAIL (IF REQUIRED)

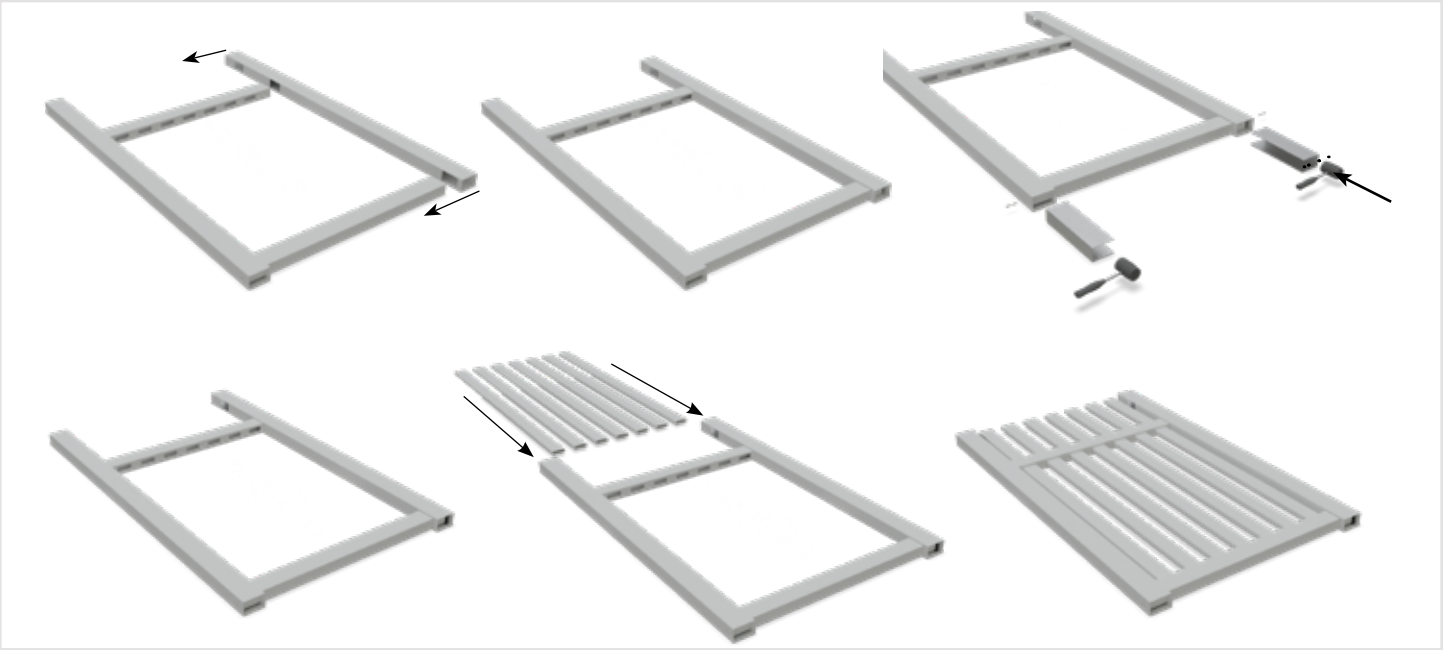

4 Assemble mid-rail into side vertical posts before assembling palings.
NOTE: Palings have a notch on one end – use notched end as BOTTOM of paling.

VERTICAL PALING GATE

GATE FABRICATION OVERVIEW

GATE ASSEMBLY CONTINUED

5 Insert palings into bottom rail. NOTE: Palings have a notch on one end – use notched end as BOTTOM of paling.
When a Midrail is being used, spread both side frames and install the Top Rail into palings one-by-one.
Once palings are installed into the Top Rail, slide both side frames into position, engaging the Midrail and Top Rail.

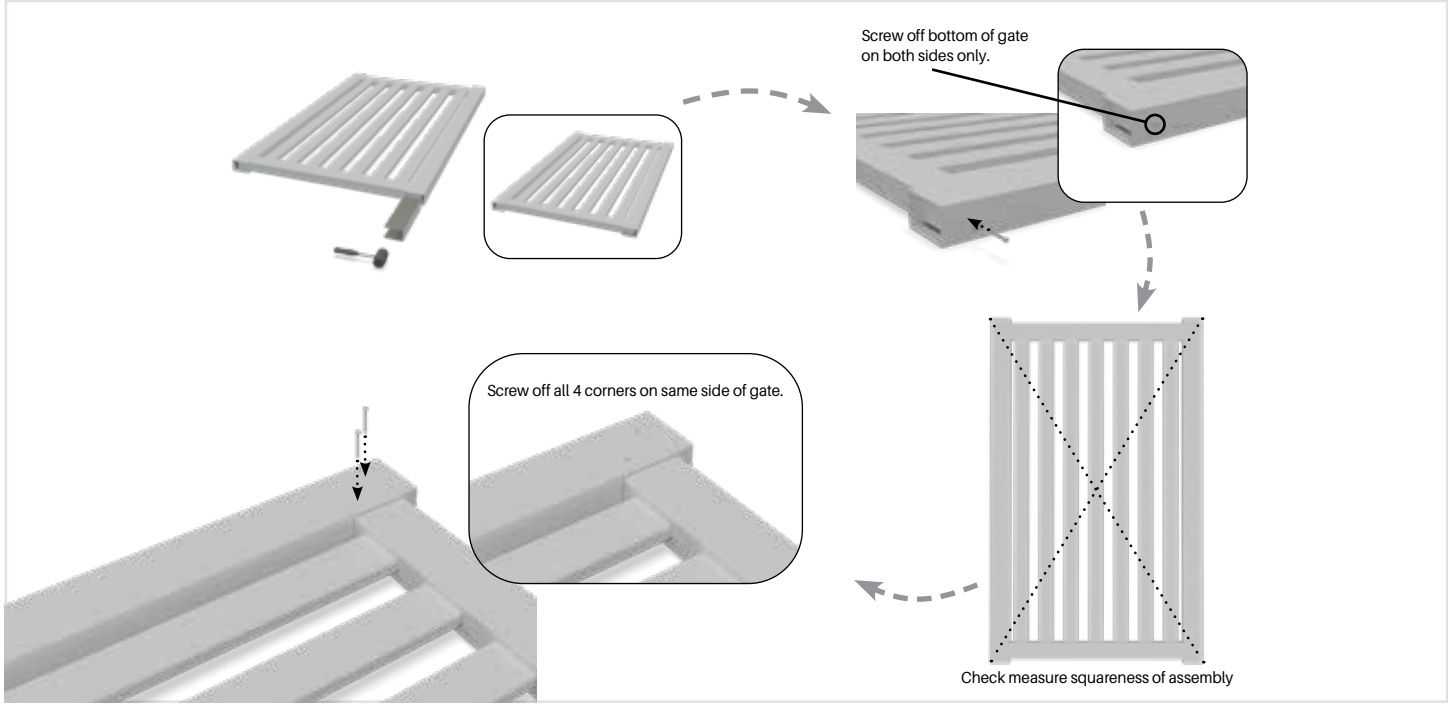

6 Using mallet, insert aluminium Internal Rigidity Inserts into top of vertical side frames and insert approximately 15mm inside side frame affixing collar and snap-caps to screws, screw-fix to the aluminium Internal Rigidity Inserts inside side frame. Check measure squareness of gate assembly and secure corner with 2 x screws. Screw off all 4 corners with 2 x screws in each corner.
For maximum rigidity, top and bottom rails should be inserted fully inside vertical side frames butting up against aluminium Internal Rigidity Inserts.

VERTICAL PALING GATE

GATE FABRICATION OVERVIEW

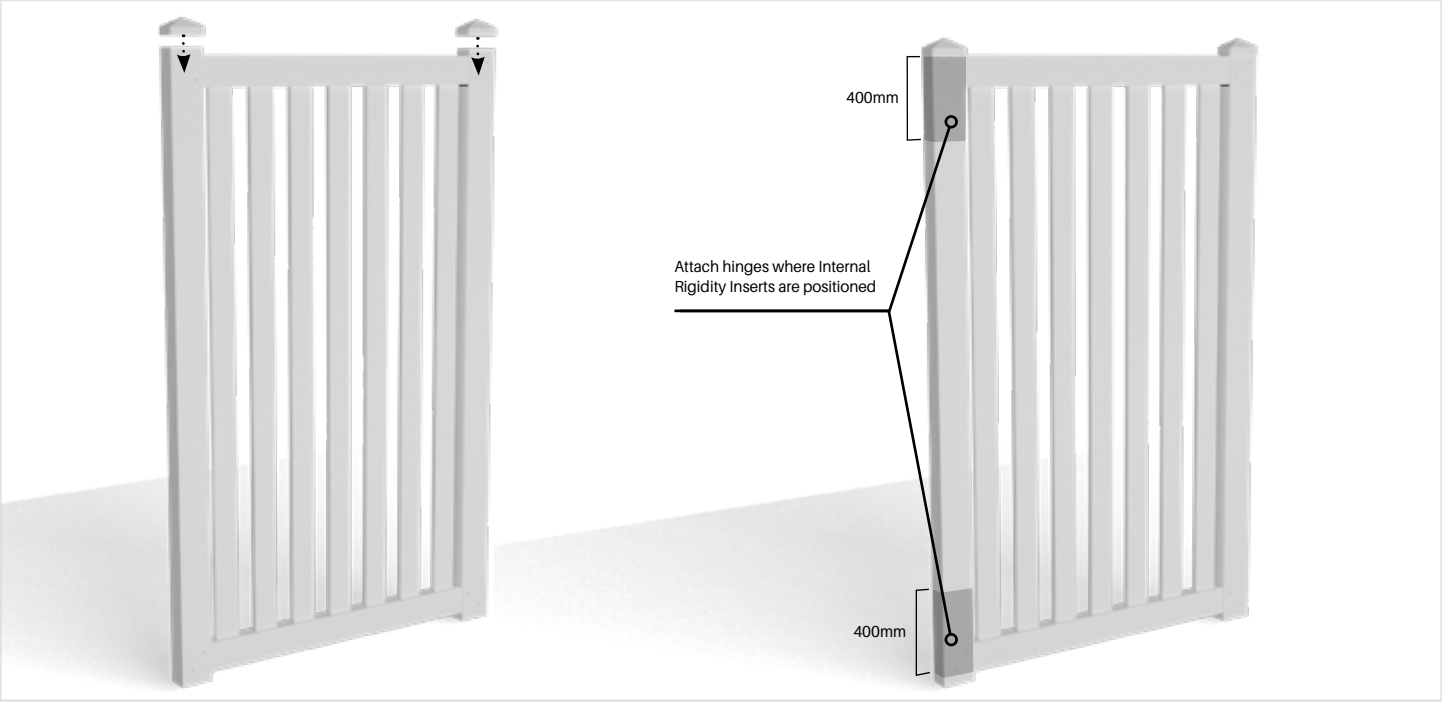

7 Press on top caps. Silicone as required.
Install gate assembly to posts with attention to installing hinges to internal aluminium Internal Rigidity Inserts.

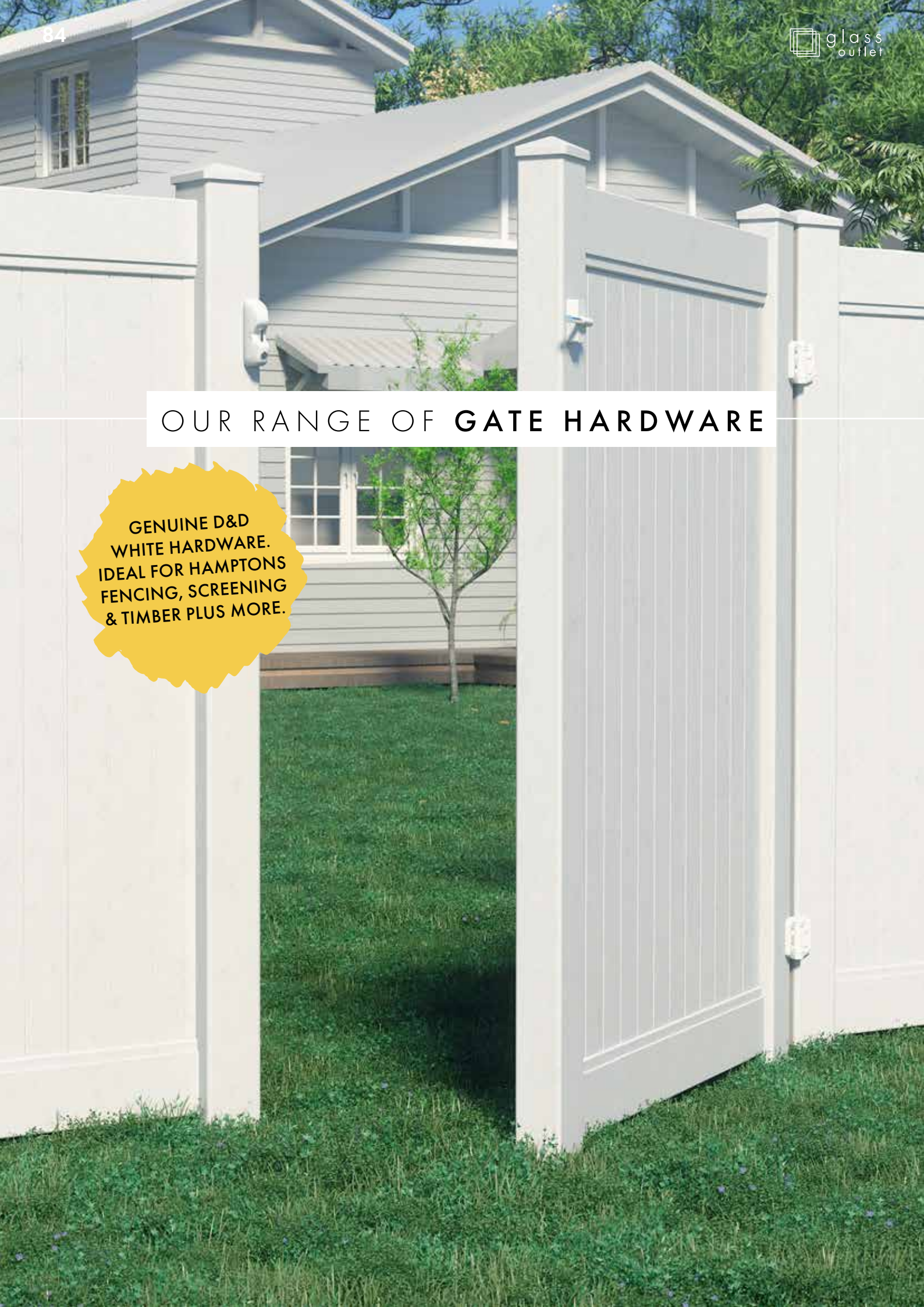

OUR RANGE OF **GATE HARDWARE**

GENUINE D&D WHITE HARDWARE. IDEAL FOR HAMPTONS FENCING, SCREENING & TIMBER PLUS MORE.

21mm gap spacing | **2** alignment legs

Two alignment legs on hinge allows for quick, easy and accurate positioning of gate onto post

TRUClose®

TruClose® hinge pair

2 ALIGNMENT LEGS

Order Code: **TC-H-AT-2L-W** (Pair)
BB-TC-H-AT-2L-W (Bulk Buy)

- D&D patented tension adjustment
- Strong, moulded polymer and stainless steel
- Adjust tension from both ends of the hinge
- No visible fixings
- Super strong engineering polymers and stainless steel components
- Won't rust, bind, sag or stain
- Limited lifetime warranty
- White polymer
- Rated for **gates up to 30kg**

ALSO AVAILABLE IN BLACK

TC-H-AT-2L-B

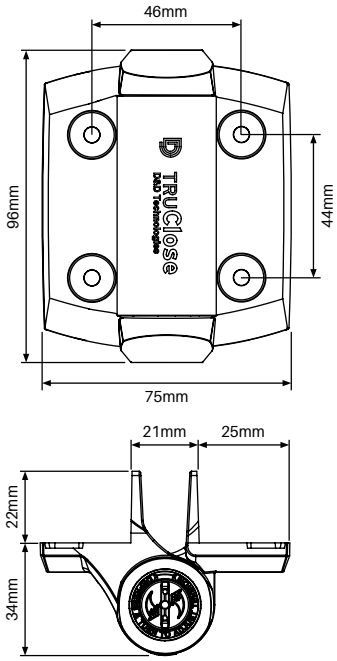

21mm gap spacing | **2** alignment legs

Two alignment legs on hinge allows for quick, easy and accurate positioning of gate onto post

TRUClose® HEAVY DUTY

TruClose® hinge pair Heavy duty

2 ALIGNMENT LEGS

Order Code: **TC-H-AT-HD-2L-W** (Pair)
BB-TC-H-AT-HD-2L-W (Bulk Buy)

- D&D patented tension adjustment
- Strong, moulded polymer and stainless steel
- Adjust tension from both ends of the hinge
- No visible fixings
- Super strong engineering polymers and stainless steel components
- Stylish and contemporary design
- Won't rust, bind, sag or stain!
- Limited lifetime warranty
- White polymer
- Rated for **gates up to 70kg**

ALSO AVAILABLE IN BLACK

TC-H-AT-HD-2L-B

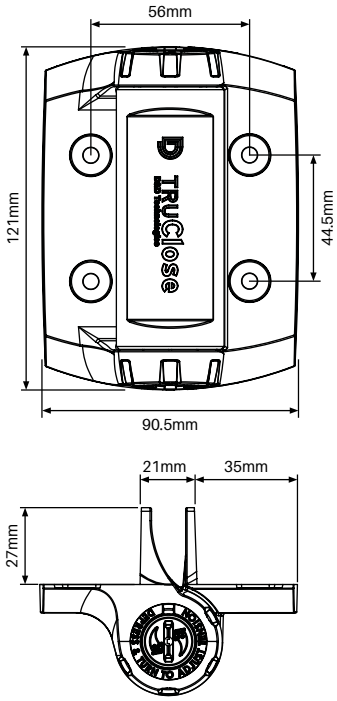

19mm gap spacing | **Adjustable tension**

POST TO GATE INSTALLATION

KWIKFit® ALUMINIUM

Kwik Fit® Aluminium hinge pair

ADJUSTABLE TENSION

Order Code: **KF-AH-AT-W** (Pair)
BB-KF-AH-AT-W (Bulk Buy)

- Powder coated white aluminium hinges
- D&D patented tension adjustment – 6 tension settings, adjustable from both ends
- Self closing hinge – closes gates up to 20kg per pair
- Internal stainless steel spring
- Wall or post mounting hinges
- Tested to over 300,000 cycles

ALSO AVAILABLE IN BLACK

KF-AH-AT

Fit to posts or walls
Adjustable fixing plate

POST TO GATE INSTALLATION

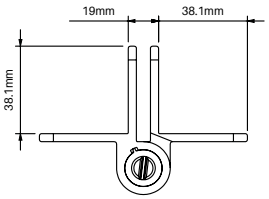

WALL TO GATE INSTALLATION

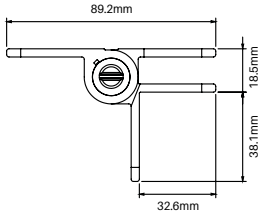

GATE HARDWARE

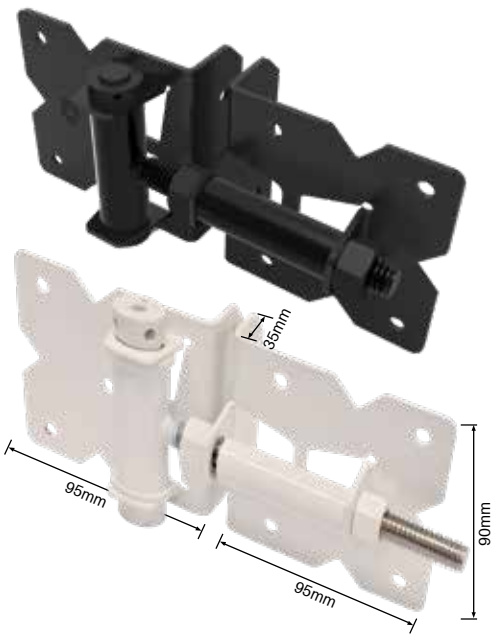

TRUClose®

Self-Closing Hinge Pair

STAINLESS STEEL

Order Code: **HF-DDHINGE-2PK-W** (White)
HF-DDHINGE-2PK-B (Black)

- Traditional Hamptons style hardware
- Available in black or white
- Self-closing with tension adjustment feature
- Easy horizontal gap adjustment: from 16 to 30mm
- Made from marine grade stainless steel
- Fasteners included

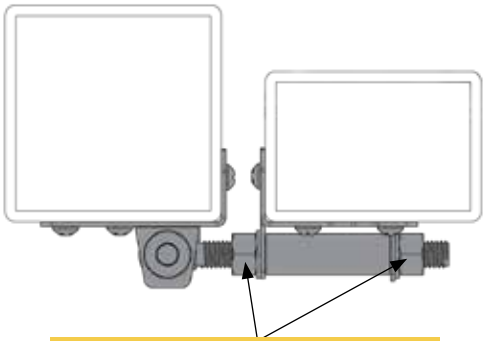

Easy gate gap adjustment: 16 to 30mm
Simply turn nuts to adjust to desired width.

INSTALLATION

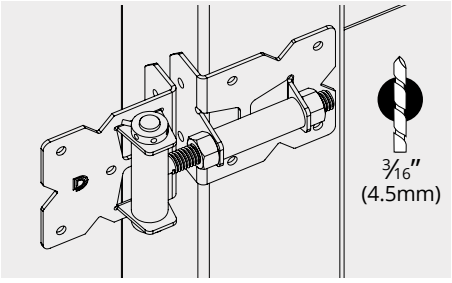

STEP 1

Place horizontal adjustment on gate only. Mark and drill pilot holes first.

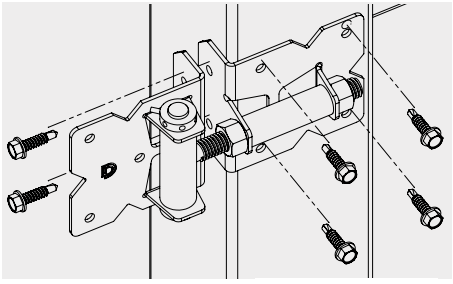

STEP 2

Screw hinge onto gate

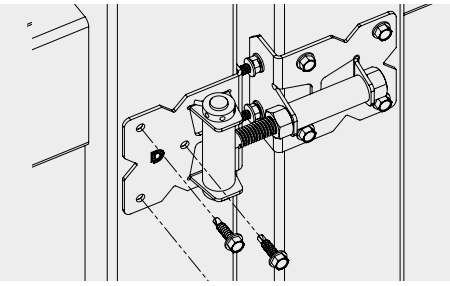

STEP 3

Screw hinge onto post

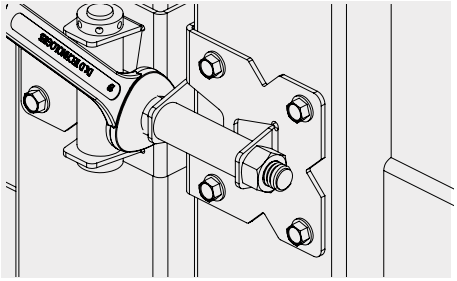

STEP 4

Horizontal adjustment

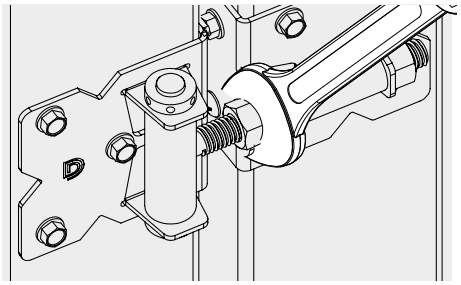

STEP 5

Fully tighten both nuts

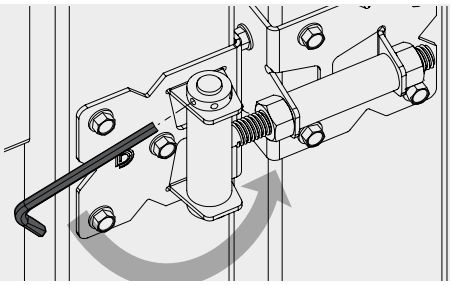

STEP 6

Insert Allen Key and rotate towards gate to increase tension

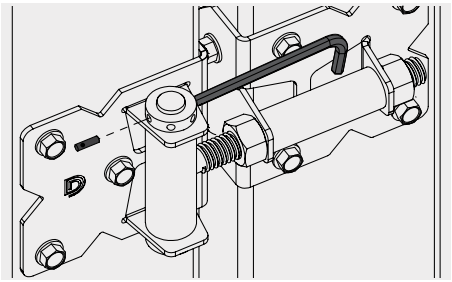

STEP 7

Insert adjustment pin

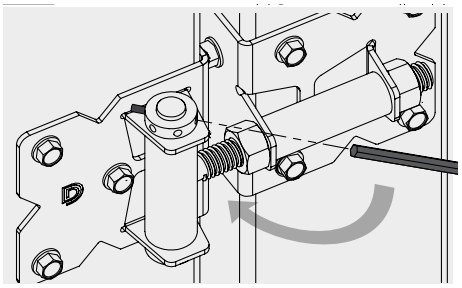

STEP 8

Rotate Allen Key towards post until the tension pin is against the hinge and remove Allen Key. Repeat points 6-8 to achieve desired tension.

COMPLETE

Images & drawings are not to scale

15-40mm
gap spacing

KEYED TO DIFFER

LOKKLatch®

Lokk Latch®

Order Code: **LLAA-W**
BB-LLAA-W (Bulk Buy)

- Ideal latch for home and garden gates
- Key lockable – no need for padlocks or chains
- Quick and easy to install on all gate materials
- Strong polymer design will not rust or stain
- Minimum post size for fitting – 25mm
- White polymer

ALSO AVAILABLE IN BLACK

LLAA

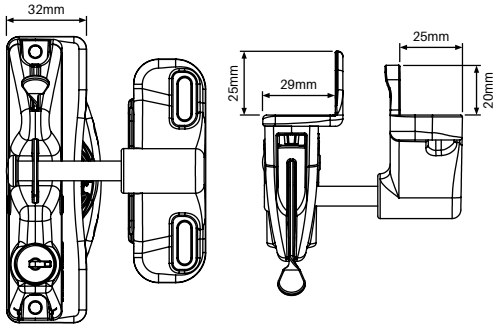

15-40mm
gap spacing

KEYED TO DIFFER

LOKKLatch® DELUXE

ALSO AVAILABLE IN BLACK

LL-DL

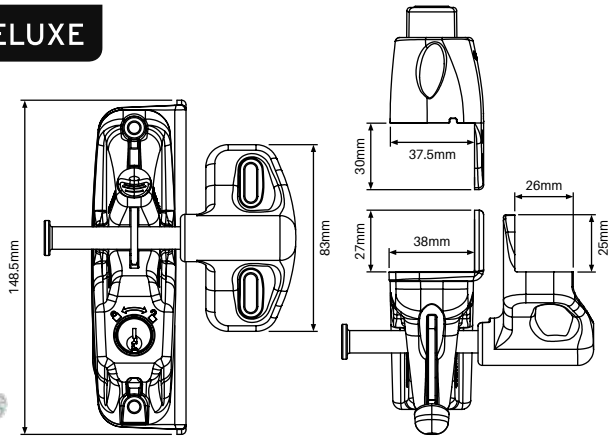

GATE LATCH & HINGE KIT

21mm
hinge gap spacing

2
alignment legs

15-40mm
latch gap spacing

+
keyed to differ

TRUClose® HEAVY DUTY

LOKKLatch® DELUXE

Lokk latch deluxe & TruClose hinge pair Heavy duty

HINGE & LATCH KIT

Order Code: **LLDL-TCHD-W**
BB-LLDL-TCHD-W (Bulk Buy)

- Kit includes D&D Lokk Latch Deluxe and 2x TRU close hinges heavy duty
- Pool fencing compliant – Rated to 70kg self close
- Latch is lockable from both sides of gate
- Ideal for aluminium screening & Hamptons gates
- White polymer

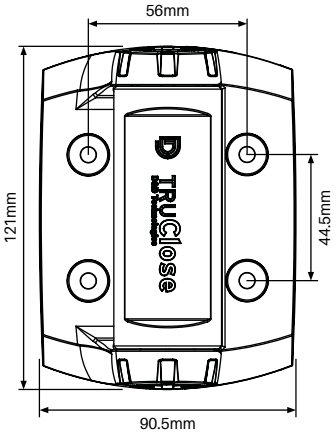

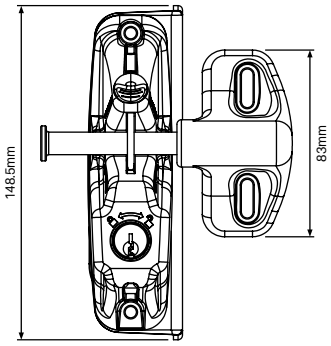

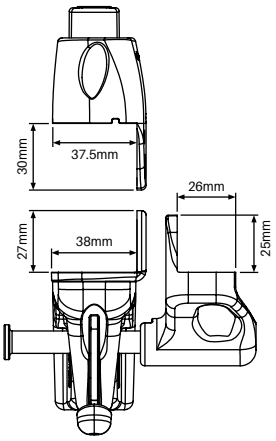

glass outlet

GATE HARDWARE

8-10mm
gap spacing

Face mount lockable latch

Order Code: **MR-FMLSL** (Black)
MR-FMSL-MW (White)

- Suits retrofitting to previously fitted
- Adjusts horizontally and vertically
- Black or white polymer
- Side pull magnetic latch
- Black latch lockable / white latch not lockable

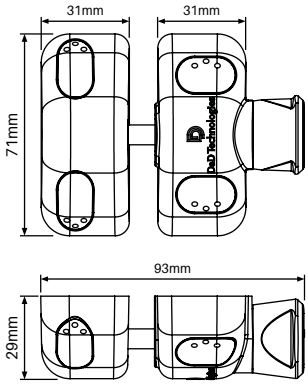

D&D Gate handle

Black & white polymer finish

Order Code: **LL-GH** (Black)
LL-GH-W (White)

- Side-fixing legs for quick alignment
- Fits left-hand or right-hand opening gates
- Won't rust or stain: strong polymer construction

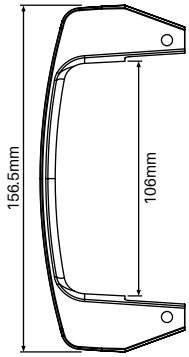

D&D Gate stop

Black polymer finish

Order Code: **SS-GS**

- Ideal gate alignment device
- Prevents damage to latches & hinges
- Greatly reduces gate-slam noise
- Tough, durable polymer + rubber bumper

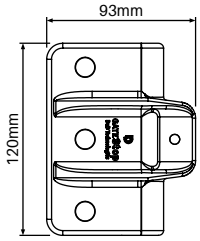

D&D White Gate Stop

White polymer finish

Order Code: **SS-GS-W**
D&D code: **TCGS1WT**

- Ideal gate alignment device
- Prevents damage to latches & hinges
- Greatly reduces gate-slam noise
- Tough, durable polymer + rubber bumper

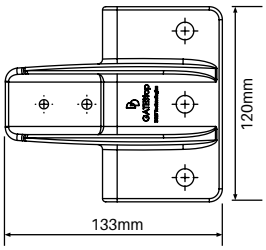

Images & drawings are not to scale

SOLAR LIGHT

NEW PRODUCT!

Solar Light

2 PACK

Order Code: **SOLAR-LIGHT-2PK**

- Suits fitting to top of fences, stair treads, decking and more
- Easy fitting 2 ways:
  (1) Stick on using supplied 3M tape and/or
  (2) screw on with supplied screws
- Includes AAA size Ni-MH rechargeable battery
- Battery can be replaced if required

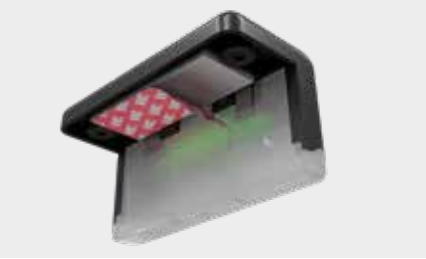

METHOD 1: USING 3M TAPE

METHOD 2: USING SCREWS

Solar Light Information

Total hours of illumination depends on the total amount of direct sunlight each light receives.

i.e 8 hrs of direct sunlight will result in the longest period of illumination at night.

The light will automatically turn on at dusk and off at dawn OR when the battery charge runs low.

If there is ambient light close by (street light) the light may not switch on as expected.

Regularly clean solar panels with a damp cloth. This will increase the potential for full solar charge.

The light gives off a 'white' glow.

glass outlet

ROUND KNOB GATE SET-UP

LOCKWOOD MODEL 534
ROUND KNOB SET

Simply purchase Hamptons Gate and add knob accessories...

PREMIUM & STYLISH FINISHING FOR HAMPTONS GATES
Genuine Lockwood Model 534 Round Knob (both sides of gate)

EASY INSTALLATION
Simply drill holes through vertical gate stile. No special routing required

SUITS FULL PRIVACY, COMBO PRIVACY, VERTICAL PALING & SEMI PRIVACY GATES
(does not suit 3 Rail Gate due to vertical gate stile being larger)

Lockwood 534 round knob set

Order Code: **HF-LW-KNOB**

- Lockwood model 534
- Extended internals to suit 63mm deep gate stile
- Satin chrome brushed finish
- Round knob set with keys both sides
- Lock / unlock both sides
- Suits left & right gate openings
- C4 5 pin on outside
- C4 6 pin restricted compatible on inside

** For LATCH POST, notch out hole for lock tongue*
** Screw fix striker plate to inner face of latch post*
** Allow 10mm latching gap as both striker plate on post and lock plate on gate stile face mounted (ie not recess fitted)*

Electric Striker

Order Code: **XP-HDL-ES**

- Optional electric striker kit
- Power required to lock/unlock
- 12 volt (DC current)
- LATCHING POST – face mount SS304 striker face plate with built in side keeper
- Requirement to notch latching post to recess electric striker mechanism
- Allow 9mm latching gap

** Routing template included with kit*

D&D White Gate Stop

White polymer finish

Order Code: **SS-GS-W**

- Gate stop required for install with knob set
- Suits Hamptons vertical gate stile
- Alternatively, a vertical white aluminium extrusion may be used as a gate stop – ensure routed around striker to not interfere with gate latching (Not supplied by Glass Outlet)

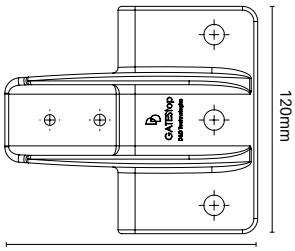

Images & drawings are not to scale

FULL PRIVACY GATES LAYOUT INFO

LAYOUT INFORMATION FOR PEDESTRIAN GATES

APPLIES TO FULL PRIVACY, COMBO & VERTICAL PALING GATES

1800mm high full privacy gate must use a latch mechanism that is operable from both sides

Hardware guide —

LATCH OPTIONS

D&D Lokk Latch Deluxe

See page 87
See page 90 for round knob set

HINGE OPTIONS

D&D Heavy Duty TruClose hinges

See page 85 & 87

PLAN VIEW OF GATE:

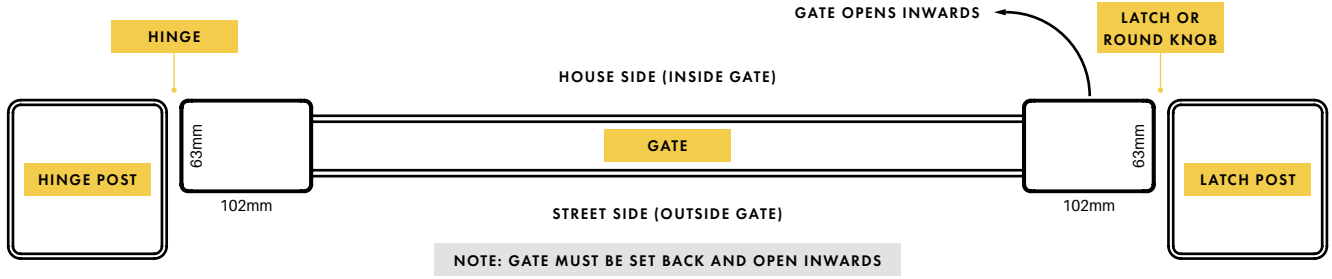

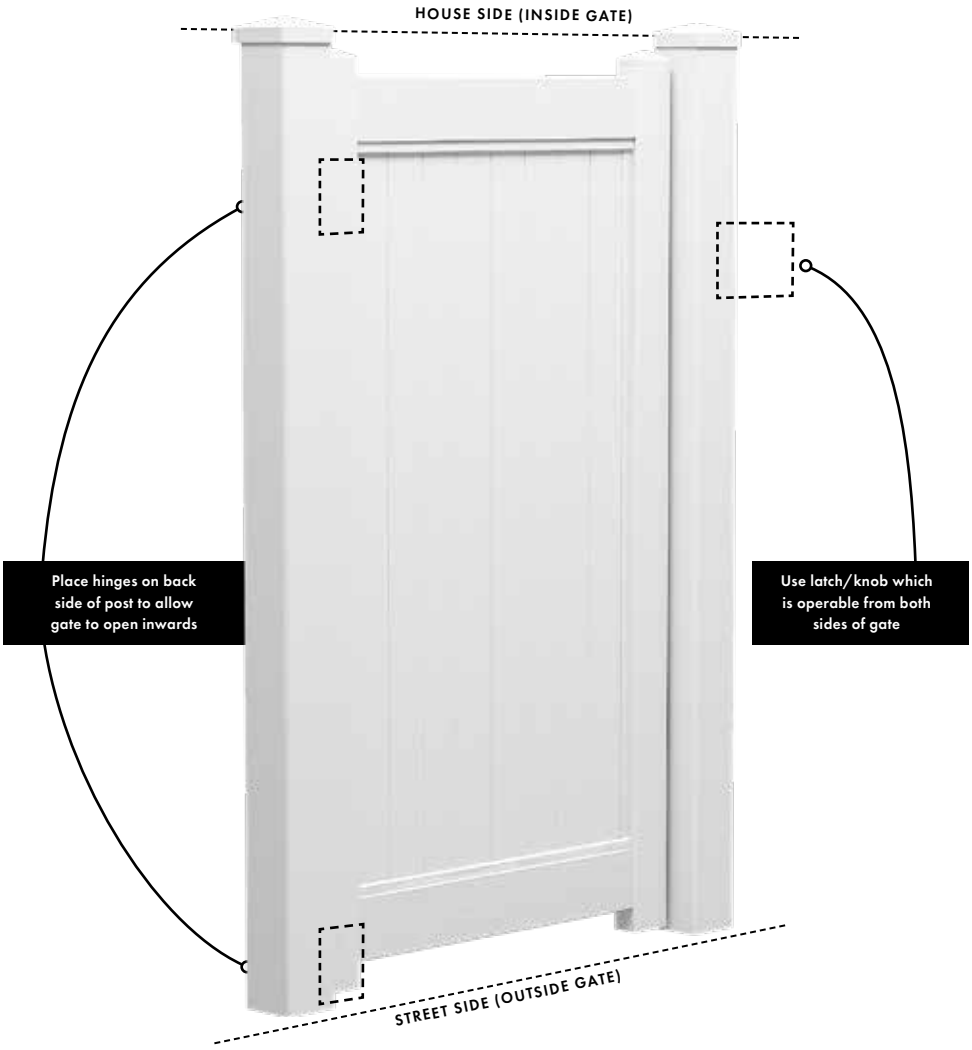

Images & drawings are not to scale

glass outlet

SEMI PRIVACY GATES **LAYOUT INFO**

LAYOUT INFORMATION FOR SEMI PRIVACY PEDESTRIAN GATES

1200mm high semi privacy gates commonly latch from one side only
Gate may be installed to swing inwards (towards the house) or outwards (away from the house)

Hardware guide —

LATCH OPTIONS

A range of one sided latching options are available

See page 87 for full specs
See page 90 for round knob set

HINGE OPTIONS

D&D Heavy Duty TruClose hinges or aluminium KwikFit hinges

See page 87 for full specs

PLAN VIEW OF GATE:

1

2

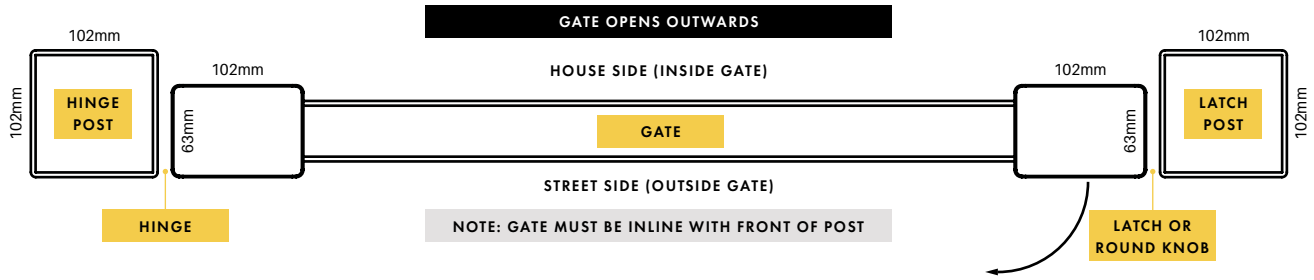

! If using LokkLatch Deluxe to latch both sides, gate must be set back and swing inwards.

1

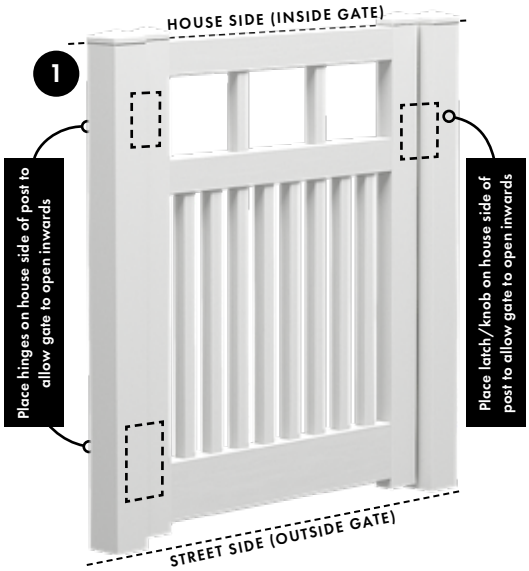

2

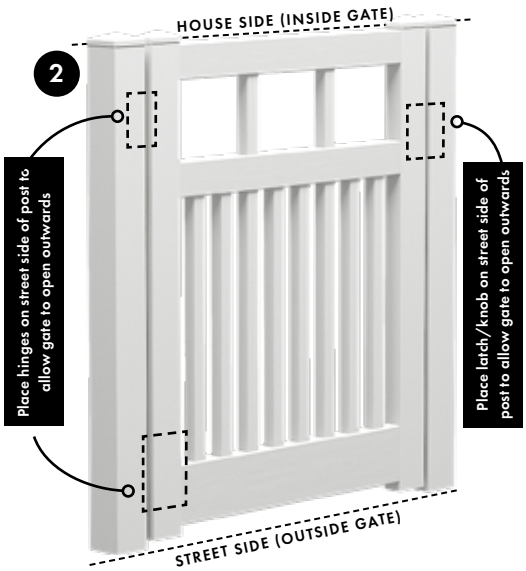

Images & drawings are not to scale

3 RAIL FENCING

LAYOUT INFORMATION FOR 3 RAIL PEDESTRIAN GATES

1300mm high 3 rail gates commonly latch from one side only
Gate may be installed to swing inwards or outwards

Hardware guide —

LATCH OPTIONS

A range of one sided latching options are available

See page 87 for full specs

HINGE OPTIONS

D&D Heavy Duty TruClose hinges or aluminium KwikFit hinges

See page 87 for full specs

PLAN VIEW OF GATE:

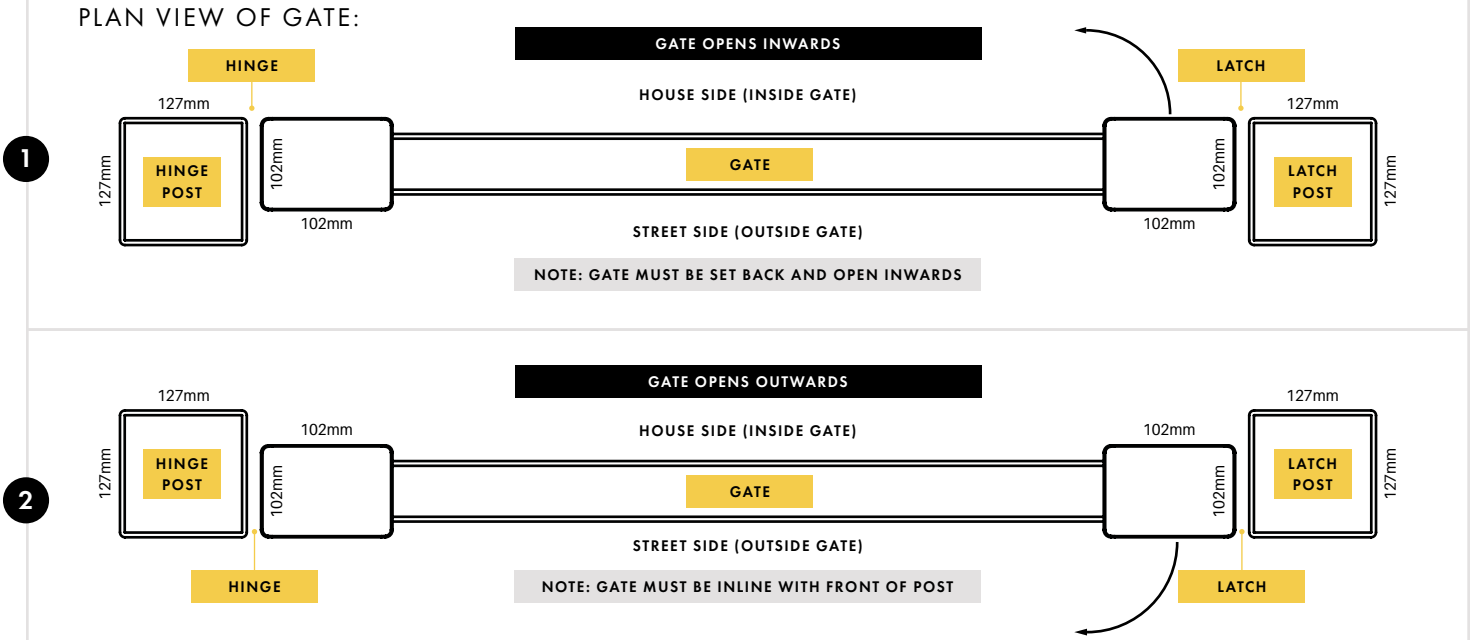

**Round knob not available for 3 rail gate*

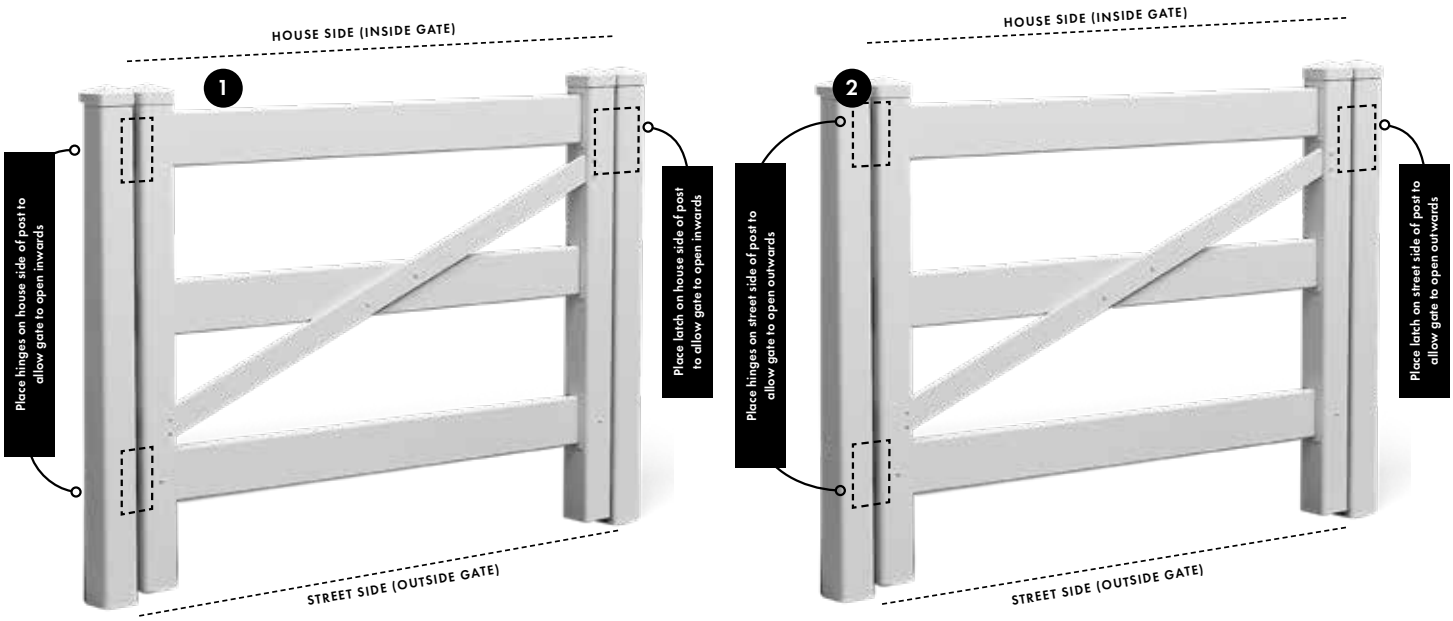

Images & drawings are not to scale

glass outlet

LETTERBOXES

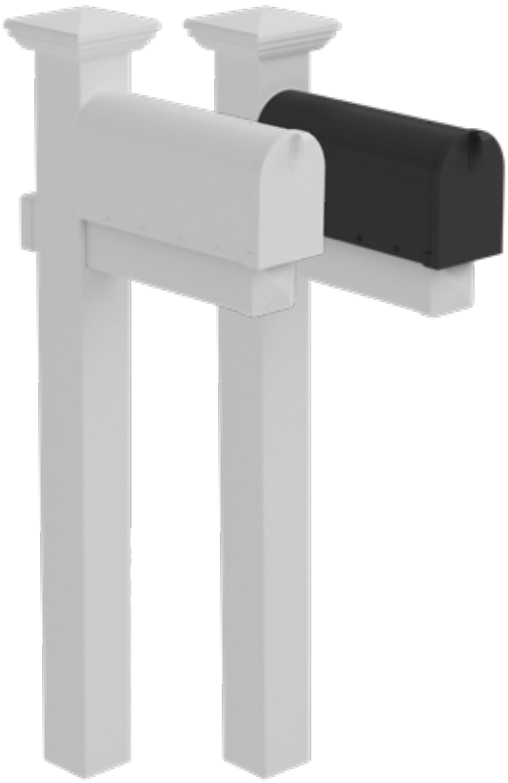

Hamptons Letterbox

WHITE OR CHARCOAL LETTERBOX

Order Code: **HF-LETTERBOX-CH (Charcoal)**
HF-LETTERBOX-W (White)

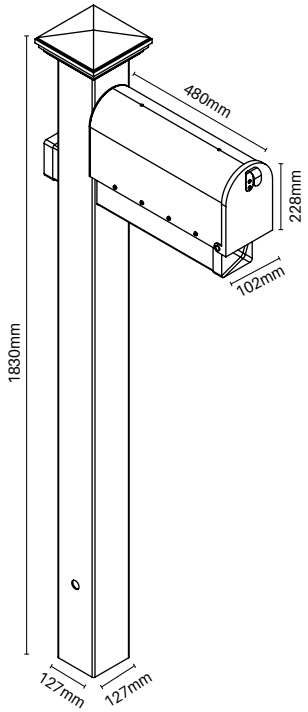

TECH SPECS

- Complete kit in 1 x box ready for easy assembly
- Kit includes post, horizontal arm, letterbox & assembly screws
- 1830mm high white PVC post for in-ground installation
- Internal base plate can be used if installing onto concrete. Use base plate (HF-FULLP-BP:- refer pg 11)
- Letterbox made from durable powder coated steel
- Refer www.productinstall.com.au/hamptons (password: hamptons1) for guidance on assembly & installation

KIT INCLUSIONS

- 1 x Vertical Post (1830mm H x 127mm W x 127mm D)
- 1 x Horizontal Arm (610mm L x 102mm W x 102mm D)
- 1 x Powder Coated Steel Mailbox (480mm L x 164mm W x 228mm H)
- 1 x Mounting Plate (380mm L x 155mm W x 25mm H)
- 1 x Post Cap & 2 x Horizontal Arm Caps
- 12 x Assembly screws

Images & drawings are not to scale

POSTA

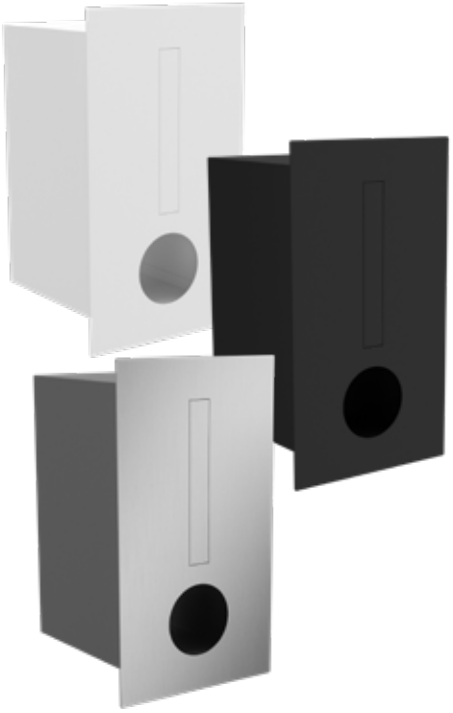

POSTA fence mount letterbox

White, Black powder coat or SS316 finishes
410mm H x 230mm W

Order Code: **POSTA-FML-W**
POSTA-FML-B
POSTA-FML-SS316

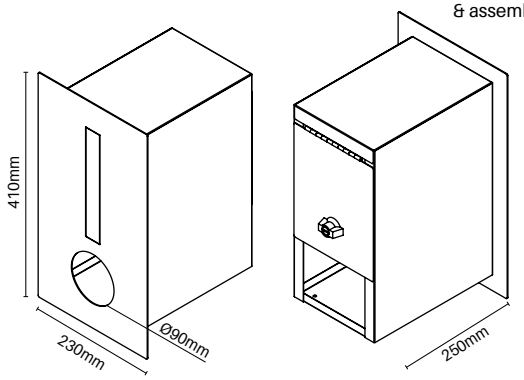

TECH SPECS

- Modern design
- Powder-coated galvanised steel letterbox in black or white finish. Also available in Stainless Steel satin finish 316 marine grade front panel with powder-coated grey galvanised box.
- Newspaper holder built in
- Rain resistant flap
- Includes key lock & keys
- Includes all mounting fittings & assembly instructions

NOTE: Features a sleeve for easy fixing to fence.

SCAN QR CODE FOR DETAILED INSTALL INSTRUCTIONS
PWD – Posta1

EASY INSTALLATION STEPS INTO HAMPTONS PANELS

(SUITS FULL PRIVACY & COMBO PANEL INSTALL)

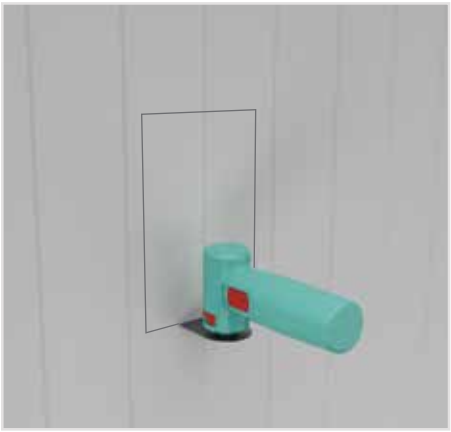

1 Using a multi-tool cut out the area marked on your panel. Cut out size is 352mm high x 172mm wide.

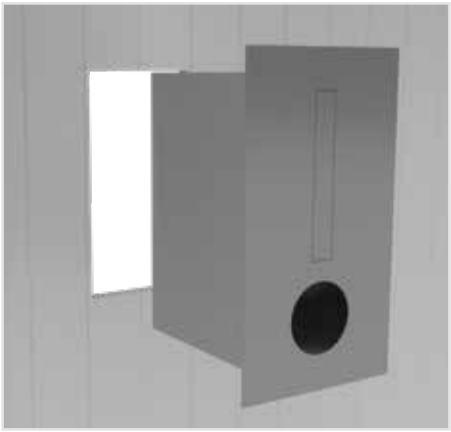

2 Insert POSTA letterbox in through cut away, ensuring the letterbox drain-holes are positioned at the bottom.

3 On inside of wall, position collar hard up against the inside of the fence panel.

4 Drill 3.5mm pilot holes into the letterbox and screw fix two provided screws each side. Discard angle brackets from screw packet.

5 With the provided screws, screw-fix collar to inside of fence panel to complete installation.

6 Finished.

Images & drawings are not to scale

glass outlet

POSTA CHARACTERS

POSTA Letters & Characters

Order Code: **See table on page 97**

Each number/letter sold separately

Finishes –

BLACK GN150A

SS316 SATIN

1234567890/ABC
1234567890/ABC

5 FINISHES AVAILABLE

1. *50mm – Black powder coat with stick on 3M adhesive*
2. *50mm – SS316 Satin with stick on 3M adhesive*
3. *120mm – Black powder coat with stick on 3M adhesive*
4. *120mm – SS316 Satin with stick on 3M adhesive*
5. *120mm – SS316 Satin with stud fixing***

TECH SPECS

- Numbers & letters available in 50mm or 120mm high
- Available in stainless steel 316 or black powder coated aluminium
- Simple solution – simply stick onto letterbox, post or wall with 3M adhesive or use 'stud' option (SS316 POSTA only) with rods
- Stylish modern font

**EASY STUD INSTALLATION *(SS316 POSTA ONLY)*

Timber frame

1. Mark holes using studs as a guide. Drill two 4mm holes. (Drill two 6mm holes for flush mount).
2. Attach character using threaded rods, washers and nuts provided.

Brick

1. Mark holes using studs as a guide.
2. Drill two 5.5mm holes, 40mm deep and insert wall plugs.
3. Screw threaded pins to character and push character into wall.

Images & drawings are not to scale

CHARACTER ORDER CODES

1

50mm A

Order Code	Description
POSTA 50MM HIGH – ALUMINIUM BLACK Powder coat 3mm thick with 3M adhesive tape	
POSTA-BLK-H050-0	Number "0"
POSTA-BLK-H050-1	Number "1"
POSTA-BLK-H050-2	Number "2"
POSTA-BLK-H050-3	Number "3"
POSTA-BLK-H050-4	Number "4"
POSTA-BLK-H050-5	Number "5"
POSTA-BLK-H050-6	Number "6"
POSTA-BLK-H050-7	Number "7"
POSTA-BLK-H050-8	Number "8"
POSTA-BLK-H050-9	Number "9"
POSTA-BLK-H050-/	Character "/"
POSTA-BLK-H050-A	Letter "A"
POSTA-BLK-H050-B	Letter "B"
POSTA-BLK-H050-C	Letter "C"

2

50mm A

Order Code	Description
POSTA 50MM HIGH – SS316 SATIN 1.5mm thick with 3M adhesive tape	
POSTA-SS-H050-0	Number "0"
POSTA-SS-H050-1	Number "1"
POSTA-SS-H050-2	Number "2"
POSTA-SS-H050-3	Number "3"
POSTA-SS-H050-4	Number "4"
POSTA-SS-H050-5	Number "5"
POSTA-SS-H050-6	Number "6"
POSTA-SS-H050-7	Number "7"
POSTA-SS-H050-8	Number "8"
POSTA-SS-H050-9	Number "9"
POSTA-SS-H050-/	Character "/"
POSTA-SS-H050-A	Letter "A"
POSTA-SS-H050-B	Letter "B"
POSTA-SS-H050-C	Letter "C"

3

120mm A

Order Code	Description
POSTA 120MM HIGH – ALUMINIUM BLACK Powder coat 3mm thick with 3M adhesive tape	
POSTA-BLK-H120-0	Number "0"
POSTA-BLK-H120-1	Number "1"
POSTA-BLK-H120-2	Number "2"
POSTA-BLK-H120-3	Number "3"
POSTA-BLK-H120-4	Number "4"
POSTA-BLK-H120-5	Number "5"
POSTA-BLK-H120-6	Number "6"
POSTA-BLK-H120-7	Number "7"
POSTA-BLK-H120-8	Number "8"
POSTA-BLK-H120-9	Number "9"
POSTA-BLK-H120-/	Character "/"
POSTA-BLK-H120-A	Letter "A"
POSTA-BLK-H120-B	Letter "B"
POSTA-BLK-H120-C	Letter "C"

4

120mm A

Order Code	Description
POSTA 120MM HIGH – SS316 SATIN 1.5mm thick with 3M adhesive tape	
POSTA-SS-H120-0	Number "0"
POSTA-SS-H120-1	Number "1"
POSTA-SS-H120-2	Number "2"
POSTA-SS-H120-3	Number "3"
POSTA-SS-H120-4	Number "4"
POSTA-SS-H120-5	Number "5"
POSTA-SS-H120-6	Number "6"
POSTA-SS-H120-7	Number "7"
POSTA-SS-H120-8	Number "8"
POSTA-SS-H120-9	Number "9"
POSTA-SS-H120-/	Character "/"
POSTA-SS-H120-A	Letter "A"
POSTA-SS-H120-B	Letter "B"
POSTA-SS-H120-C	Letter "C"

5

Order Code	Description
POSTA – 120MM High WITH STUD MOUNT – SS316 SATIN 1.5mm thick with 2 x M4 SS304 threaded rod + nuts/ washers and 2 x M4 pointed SS304 threaded rod	
POSTA-STUD-H120-0	Number "0"
POSTA-STUD-H120-1	Number "1"
POSTA-STUD-H120-2	Number "2"
POSTA-STUD-H120-3	Number "3"
POSTA-STUD-H120-4	Number "4"
POSTA-STUD-H120-5	Number "5"
POSTA-STUD-H120-6	Number "6"
POSTA-STUD-H120-7	Number "7"
POSTA-STUD-H120-8	Number "8"
POSTA-STUD-H120-9	Number "9"
POSTA-STUD-H120-/	Character "/"
POSTA-STUD-H120-A	Letter "A"
POSTA-STUD-H120-B	Letter "B"
POSTA-STUD-H120-C	Letter "C"

SCAN QR CODE FOR DETAILED INSTALL INSTRUCTIONS

PWD - Posta1

120mm

FLOATING 3D EFFECT SITS OFF 8MM

Images & drawings are not to scale

glass outlet

GARDEN EDGING

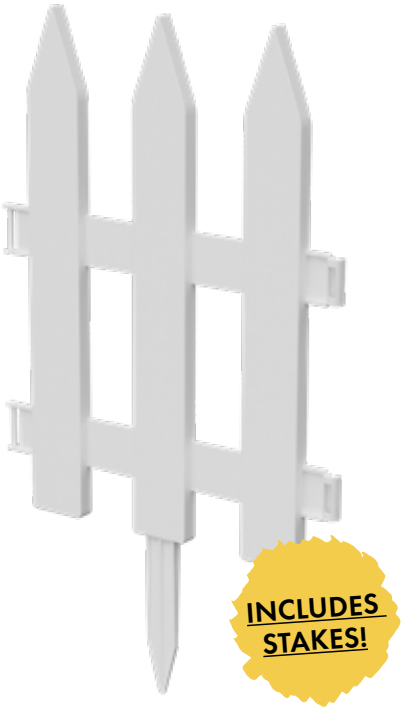

Garden/Lawn Edging

3000MM W x 400MM H
White
10 PACK
Order Code: **HF-EDGING-10PK**

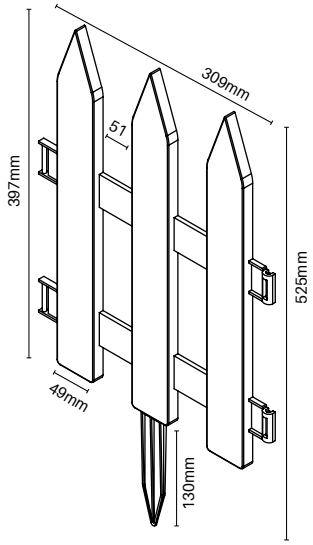

TECH SPECS

- Each piece is 400mm High x 300mm wide
- Pack of 10
- Makes 3000mm wide when joined together
- Panels simply click together
- No painting required
- UV stable product
- Durable hard wearing construction
- Flexible so can curve around corners
- Includes integrated stakes for inserting into earth (not suitable for hard ground)

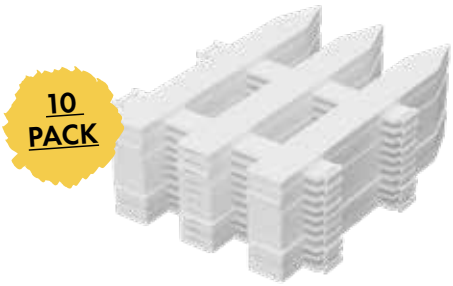

EASY EDGING INSTALLATION

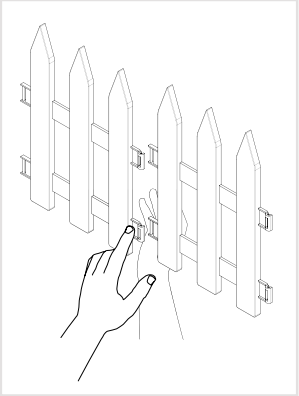

1 Clip panel together

When joining panels, press together at joining point supporting joining tabs with hands on both sides.

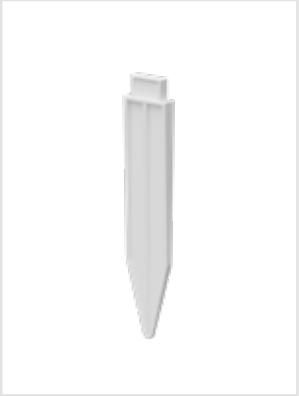

2 Insert stakes

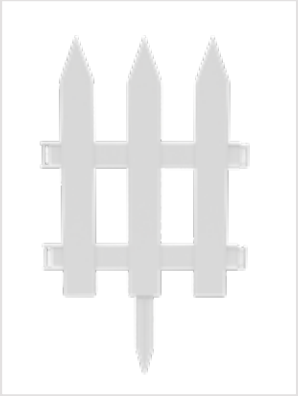

2 Push into ground

Images & drawings are not to scale

PLANTER BOX

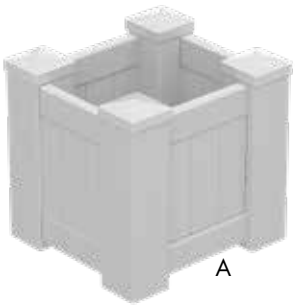

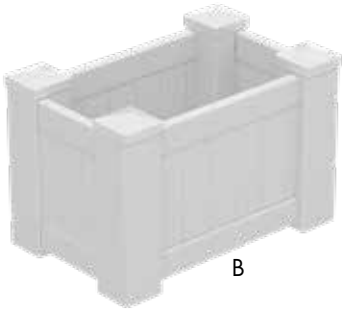

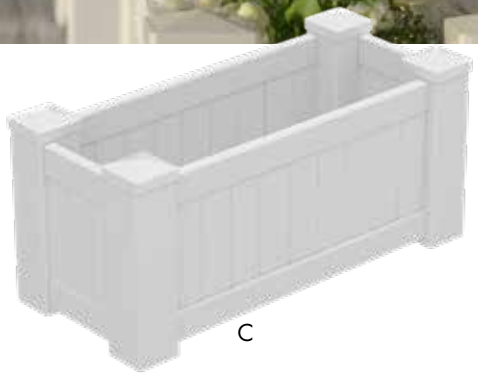

SPECIFICATIONS

A	Outer dimensions: 505mm W x 505mm L x 500mm H	Internal dimensions: 400mm W x 400mm L x 380mm H
B	Outer dimensions: 505mm W x 795mm L x 500mm H	Internal dimensions: 400mm W x 690mm L x 380mm H
C	Outer dimensions: 505mm W x 1085mm L x 500mm H	Internal dimensions: 400mm W x 980mm L x 380mm H

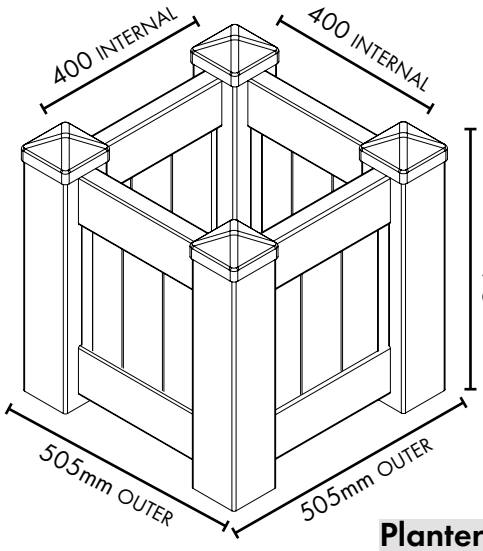

Planter box – Square (A)

Order Code: **HF-PLANTBOX-0505**

Planter box – Small (B)

Order Code: **HF-PLANTBOX-0795**

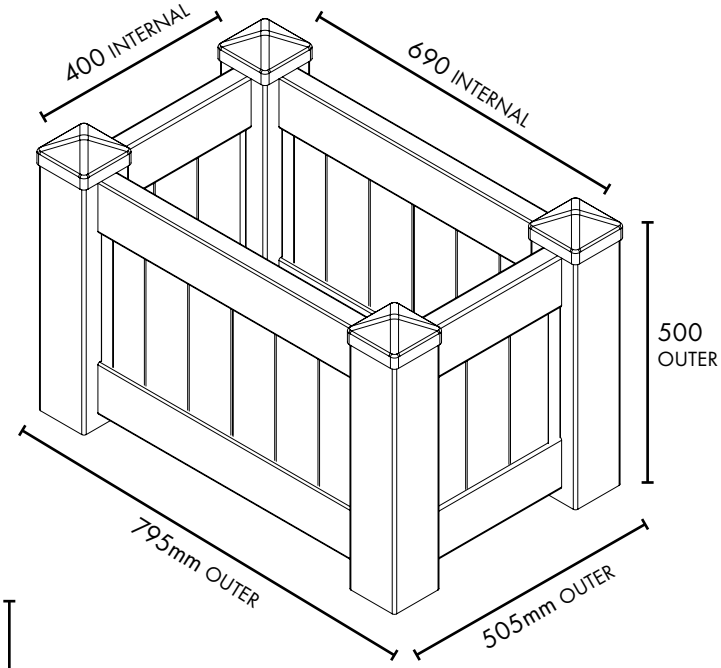

Planter box – Large (C)

Order Code: **HF-PLANTBOX-1085**

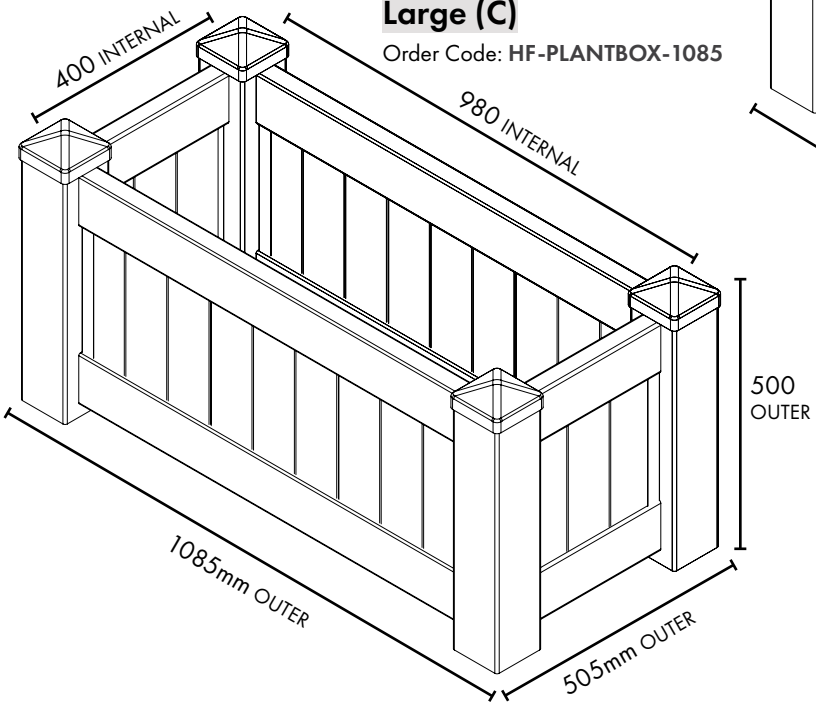

MATERIAL

DURABLE PVC FINISH – UV STABLE

Images & drawings are not to scale

PLANTER BOX – ASSEMBLY GUIDE

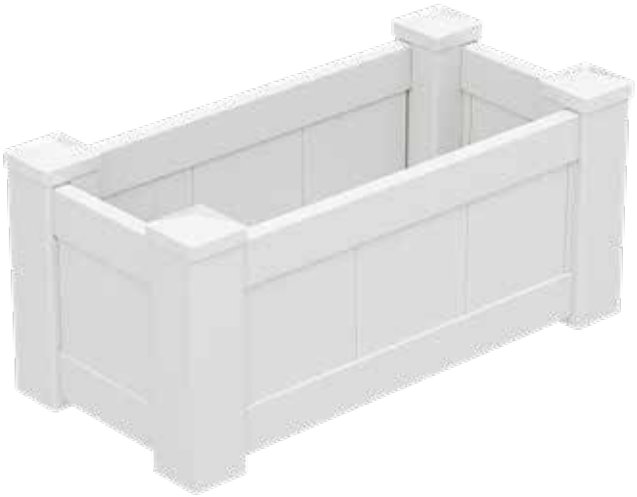

Material List

Item	QTY
Post	4
Top Rail	4
Bottom Rail	4
Panel	4 (505mm wide planter box) 6 (795mm wide planter box) 8 (1085mm wide planter box)
U-Channel	8
Floor Rails	3
Bottom Panel	1
Locking Plate	8
Screws	24
Post Cap	4

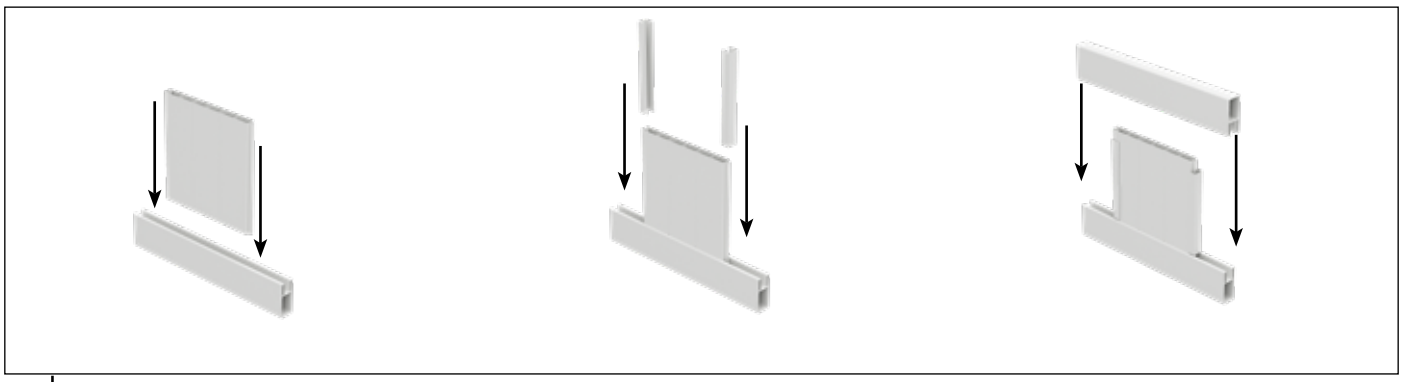

1 Assemble ends. Insert panel into end top and bottom rail with U channels on each side.

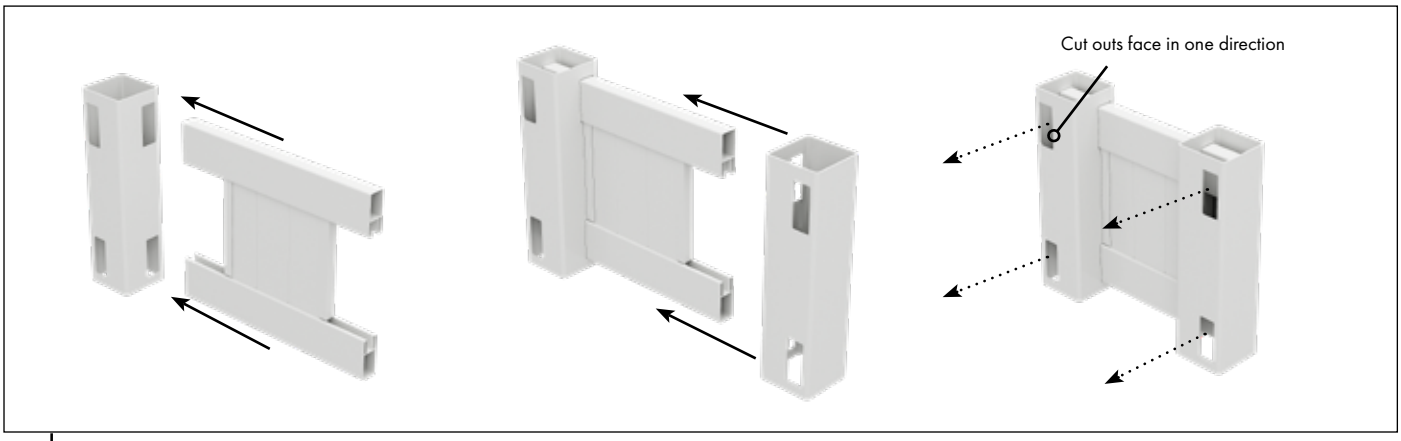

2 Push assembled end into corner post.
Line up with 2nd corner post, making sure cut outs are facing the same direction.
Repeat steps 1 & 2 for second end.

Images & drawings are not to scale

PLANTER BOX – ASSEMBLY GUIDE

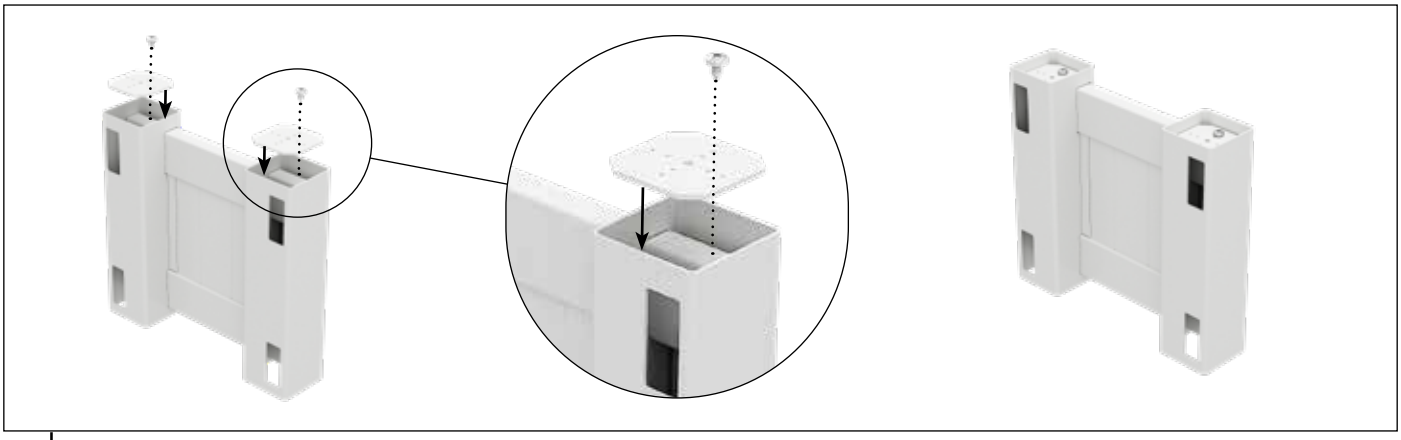

3 For both end assemblies: Attach locking plate with screw to hold rail in position on top only.
The position of the locking plate will determine top of planter box – do not install a locking plate on the bottom side (other end).

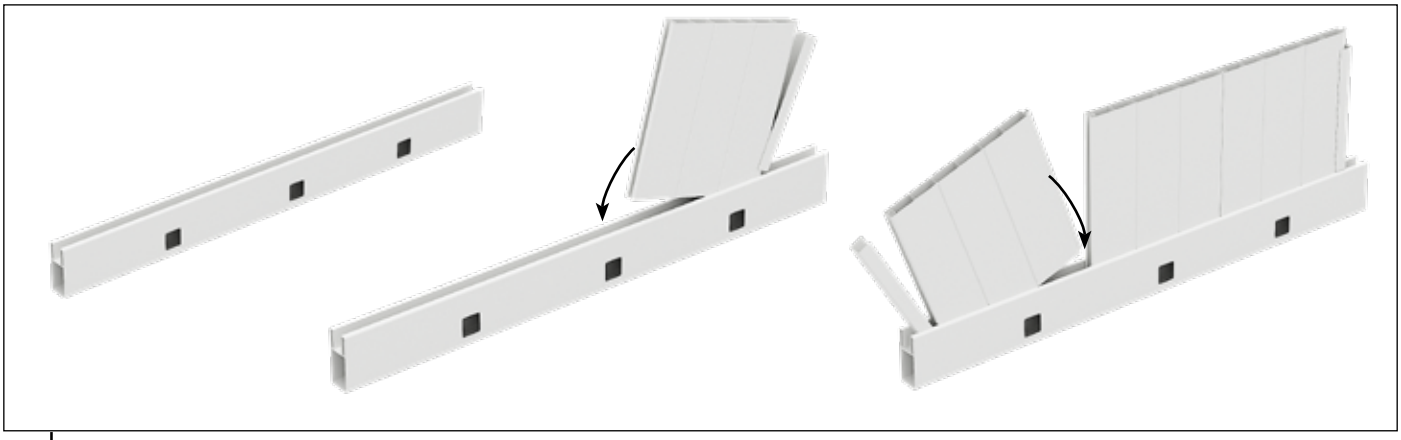

4 Locate side bottom rails (bottom rails have 3 x square punched holes along length).
Insert panels into side bottom rails (note depending on the chosen planter size you will have either 2 or 3 panels to insert into bottom rail).
U channel should be inserted on both ends.

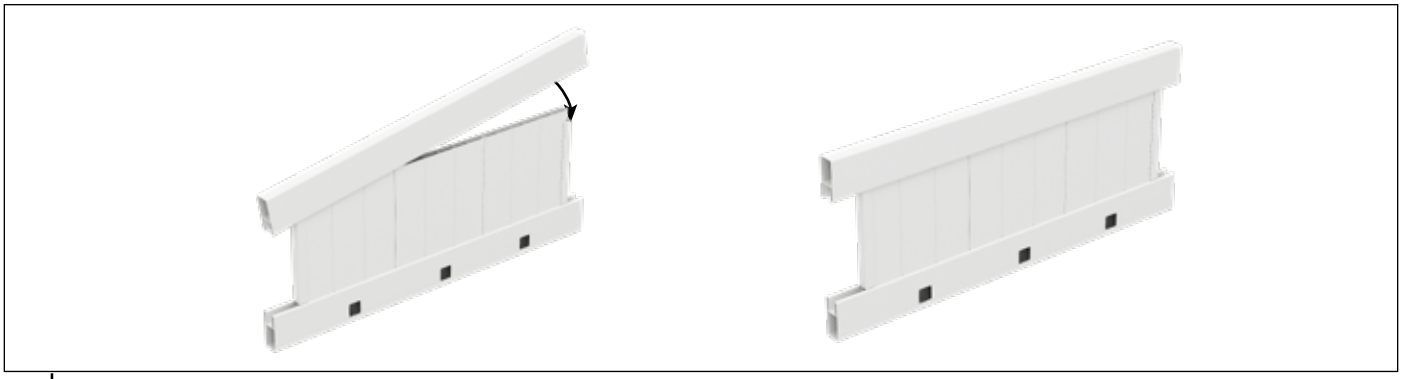

5 Attach side top rail. Repeat steps 4 & 5 to assemble second side.

PLANTER BOX – ASSEMBLY GUIDE

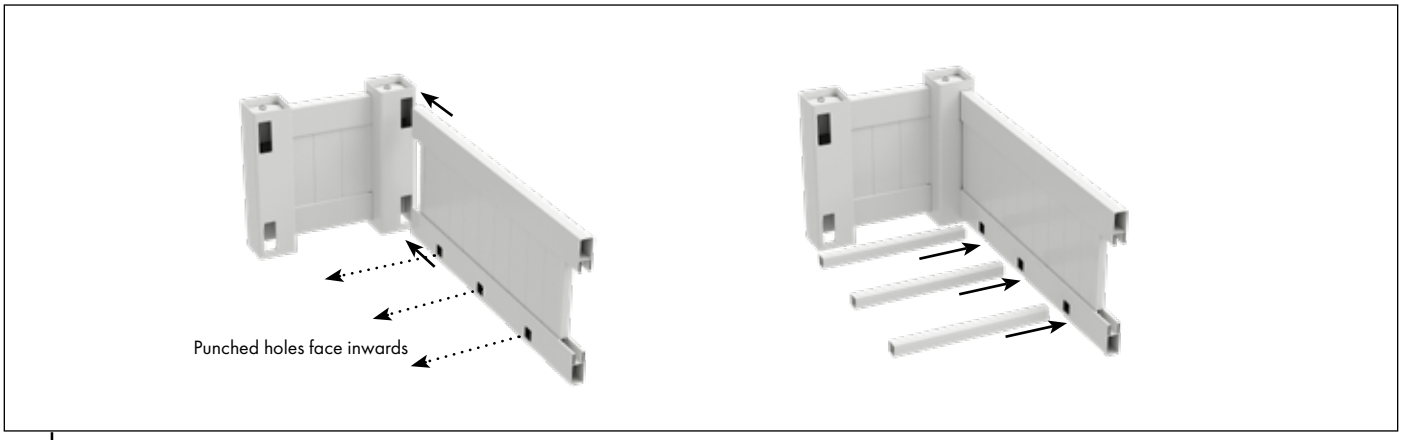

6 Attach sides to ends ensuring punched holes face inwards.
Insert 3 x square floor rails into side bottom rail.

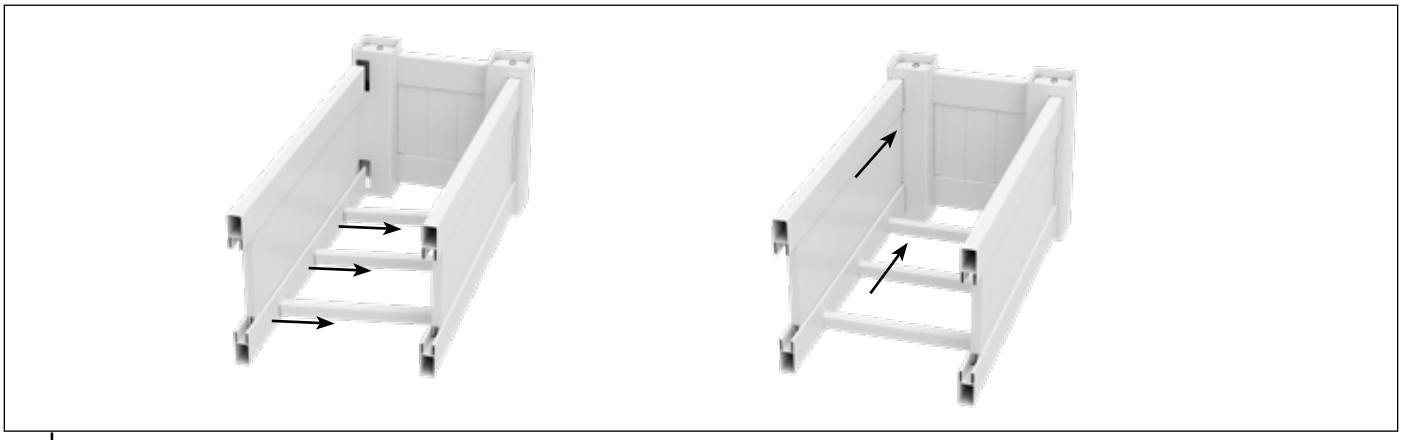

7 Line up and attach second side bottom rail to floor rails.
Line up and attach side to end piece.

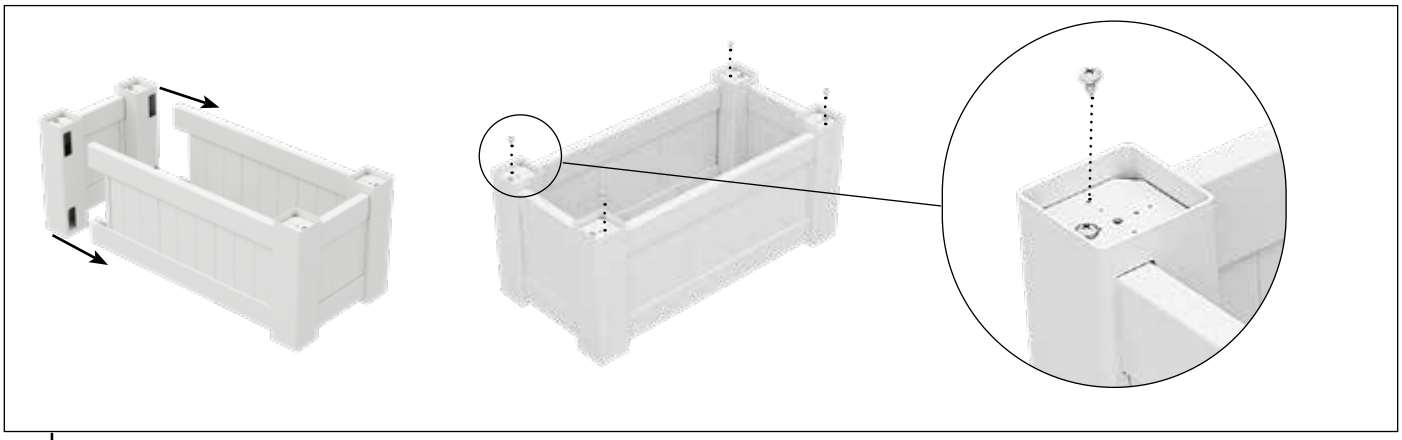

8 Line up and attach remaining end piece. Before screwing off, ensure planter box in correct shape – angles must be at 90 degrees.
Screw ends and sides together through top locking plates only on all corners.

PLANTER BOX – ASSEMBLY GUIDE

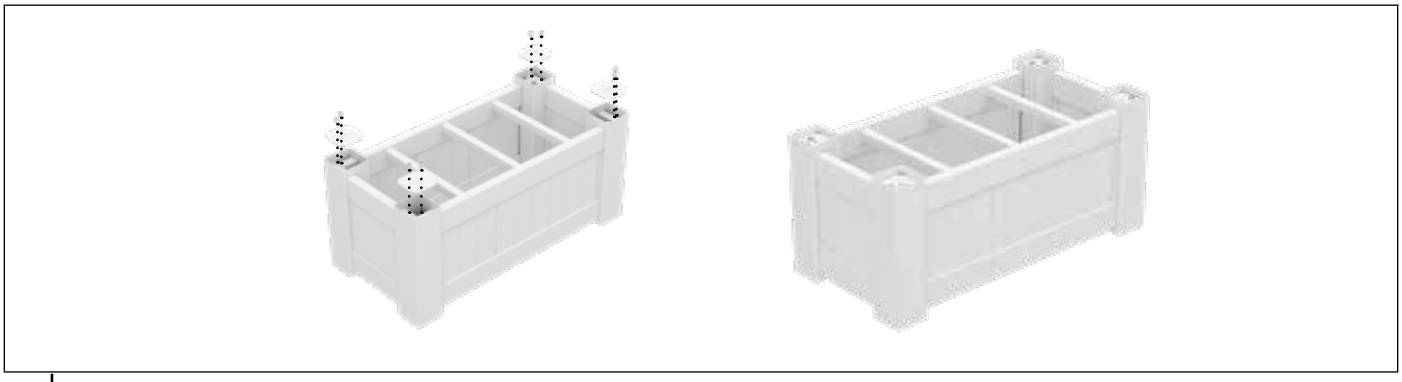

9 Turn upside down and screw in bottom locking plates to rails x 4.

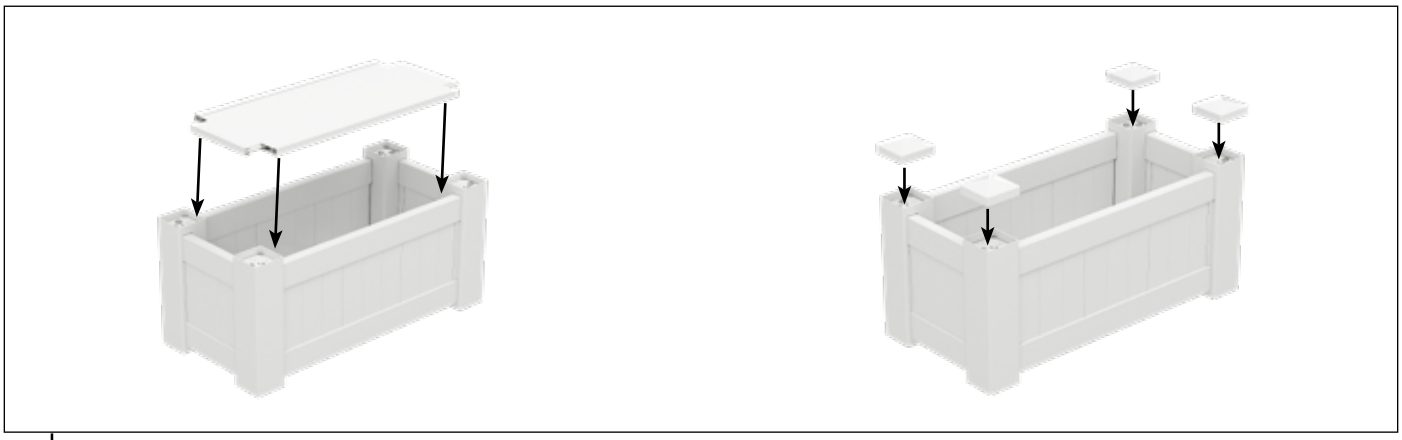

10 Once all rails are secure, turn correct side up and place into position bottom panel.
Place on post caps x 4.

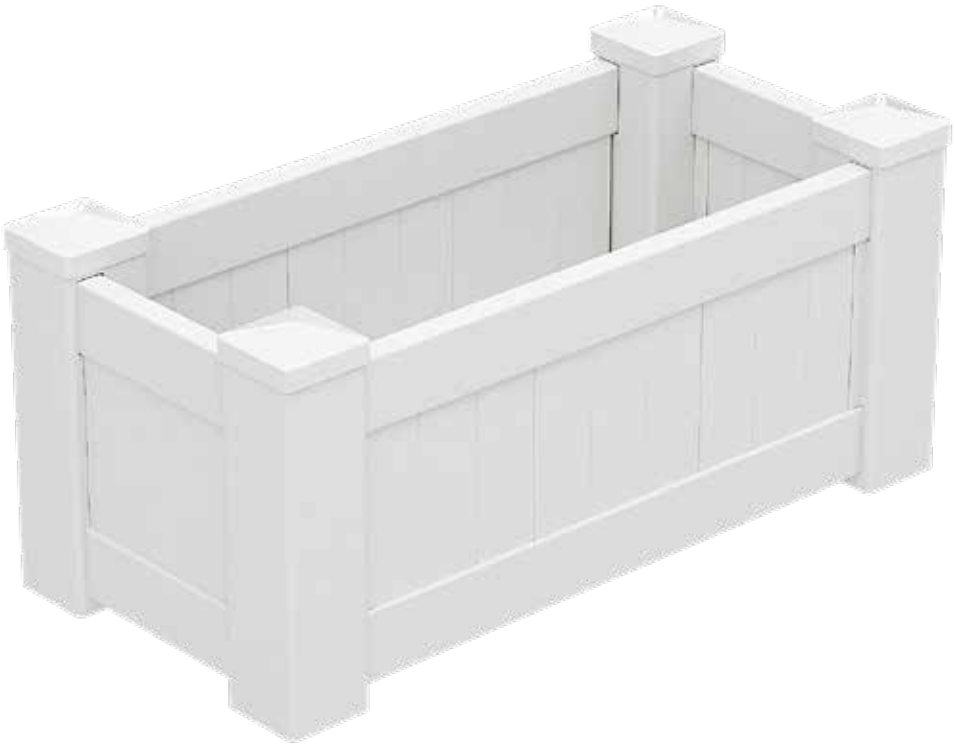

glass outlet

FROM US TO YOU, REAL QUICK.

AUSTRALIA WIDE DELIVERY OPTIONS

Online ordering is now available across our in stock ranges. Open 24/7 – Save your favourites, view your invoices and jump straight to our latest catalogues and the best part it's all at your fingertips with your trade/ wholesale pricing. Login or register now for your secure username & password **www.glassoutletonline.com.au**

Pick up is available from all 8 of our depots in Queensland, Melbourne, Newcastle, Adelaide and Perth.

We also offer a preorder + collect system for when you are tight on time. Contact us for more info.

We aim to provide fast delivery every time by utilising multiple distribution centres across the country with dedicated delivery trucks.

With depots in Brisbane, Yatala, Gold Coast, Derrimut, Dandenong, Adelaide, Newcastle and Perth.

Palletised freight & smaller courier orders can be organised for a huge range of our products. Contact us to discuss quick & cost effective options.

OUR DEPOTS

Queensland

BRISBANE

07 3267 7968

07 3267 8199

salesbris@glassoutlet.com.au

Building 9, 153 St Vincents Rd
Virginia, QLD 4014

Office opening hours:
Mon-Fri: 7am-3:30pm
Warehouse opening hours:
Mon-Fri: 7am-3pm

GOLD COAST

07 5594 0343

07 5594 0157

salesgc@glassoutlet.com.au

28 Barnett Place
Molendinar, QLD 4214

Office & warehouse opening hours:
Mon-Fri: 7am-3pm

YATALA

07 3445 4004

07 5594 0157

sales@aluminiumoutlet.com.au

4 Binary Street
Yatala, QLD 4207

Office & warehouse opening hours:
Mon-Fri: 7am-3pm

South Australia

ADELAIDE

08 8359 4048

08 8162 5537

salesadl@glassoutlet.com.au

490 Churchill Rd
Kilburn, SA 5084

Office & warehouse opening hours:
Mon-Fri: 7:30am-3:30pm

Western Australia

PERTH

08 6499 2868

08 9384 7711

saleswa@glassoutlet.com.au

10A Marriott Rd
Jandakot, WA 6164

Office & warehouse opening hours:
Mon-Fri: 7:30am-3:30pm

New South Wales

NEWCASTLE

02 4069 0833

02 4006 3040

salesnc@glassoutlet.com.au

9B Pennant Street
Cardiff, NSW 2285

Office & warehouse opening hours:
Mon-Fri: 7:30am-3:30pm

Victoria

MELBOURNE WEST

03 9363 7744

03 9363 4755

salesder@glassoutlet.com.au

1/139 Studley Crt
Derrimut, VIC 3026

Office & warehouse opening hours:
Mon-Fri: 7:30am-3:30pm

MELBOURNE SOUTH EAST

03 9706 9886

03 9706 7514

salesdan@glassoutlet.com.au

15 Stephen Rd
Dandenong South, VIC 3175

Office & warehouse opening hours:
Mon-Fri: 7:30am-3:30pm

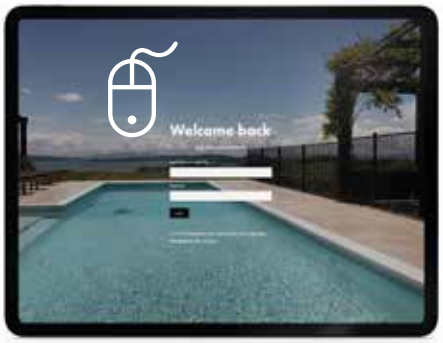

LOVE TO SEE YOU AT OUR NEW ONLINE STORE

https://glassoutletonline.com.au

glass outlet

Errors and omissions excepted. Measurements and drawings are provided as a guide only and should not be relied upon solely for installation purposes.

Product codes, products and prices may change at Glass Outlet's discretion as systems are constantly reviewed and updated. Please contact Glass Outlet if you require clarification of product codes, pricing or product stocking.

Due to each installation situation being different, it is the installer's responsibility to seek engineering compliance and/or certification should it be required as part of a project, regulatory or statutory requirement.

As each installation site is different, it is the installer's responsibility to consider the impact of wind loads on the design of a fence. Please consult your engineer for site specific matters relating to wind loads.

Colours displayed in PDF's or printed documents are indicative only and should not be relied on as a true representation of actual powder coat colour. All products should adhere to a suitable care and maintenance schedule.

©Copyright 2024. This catalogue is the copyright of Glass Outlet and cannot be reproduced, copied or replicated without the prior written consent of Glass Outlet. Such consent applies to images as well as text.

HAMPTONS FENCING V3