Glass Outlet

Glass Shower Screen
Systems

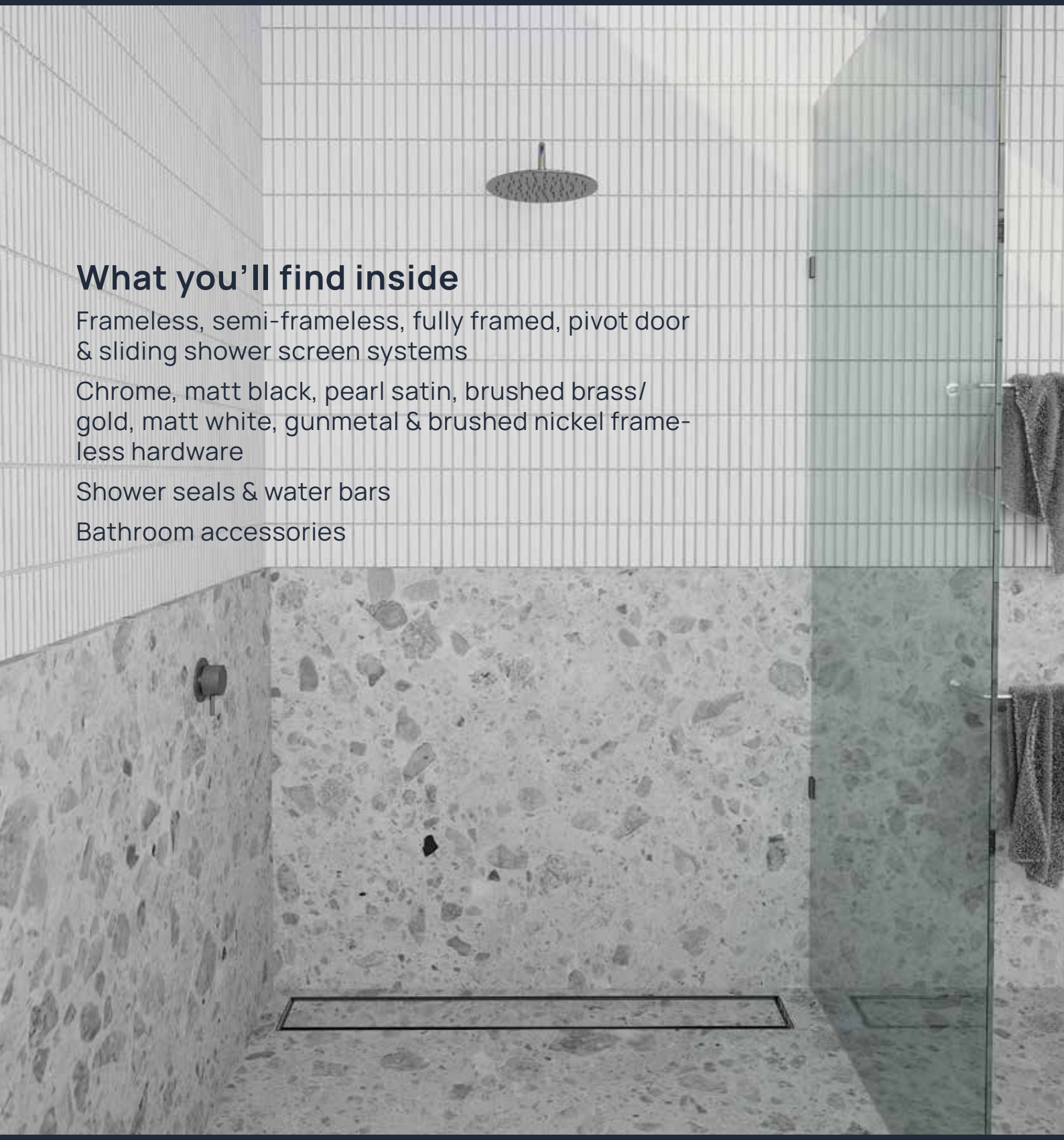

What you'll find inside

Frameless, semi-frameless, fully framed, pivot door & sliding shower screen systems

Chrome, matt black, pearl satin, brushed brass/ gold, matt white, gunmetal & brushed nickel frame-less hardware

Shower seals & water bars

Bathroom accessories

The essentials.

PAGE 8

Frameless shower screens

Frameless modular glass panels with a selection of stylish hardware

PAGE 86

STÄL sliding shower screens

Fully framed shower screens available in matt black, chrome polish or brushed gold finish

PAGE 116

Trilogy series shower screens

Fully framed shower screens available in matt black or chrome polish

PAGE 129

Bathware accessories

Contemporary ranges to complement any bathroom

And everything else.

Purity BIANCO chrome hardware overview 8
Zürich chrome hardware overview 10
Zürich pearl satin hardware overview 11
Purity NERO matt black hardware overview 12
Purity ORO brushed gold hardware overview 14
Purity SNO matt white hardware overview 16
Purity GIO gunmetal hardware overview 17
Purity NiKL brushed nickel hardware overview 19
Purity & Zürich hinges 20
Purity & Zürich wall brackets 29
Purity mechanically fixed brackets 32
Purity & Zürich knobs & handles 34
Purity brace brackets & door stops 39
Purity support & stabiliser arms 40
L Angle Brace 42
Purity accessories 44
Purity u channels, water seals & water bars 46
Extras & accessories 52
Purity modular glass panels 54
Ultraclear narrow reeded 58
Bath screens 61
Privacy shower configurations 64
Linea framed shower range 84
STÄL sliding shower screens 86
STÄL hardware 88
STÄL custom glass 96
STÄL modular glass panels 99
STÄL glass layout configurations 100
Trilogy Series shower screens 116
Trilogy Series inline shower panels 119
Trilogy Sill-Less Shower Kits 122
Trilogy Series return shower panels 124
Trilogy Series return hardware kits 126
AERO bathroom accessories 130
CURVE bathroom accessories 135
PILLAR bathroom accessories 138
Shower hinge overview 144
Bracket & knob overview 146
Bracket & handle hardware overview 148
Project orders 152
Delivery options 156
Our depots 157

Advantages of Glass Outlet

Wholesale & trade only supplier

Our focus is providing complete solutions to the trade only. This clear focus allows us to provide the best customer service & quality products to the trade.

High quality products

We pride ourselves on attention to detail in all aspects of sourcing and supplying products. We look domestically and worldwide for factories with the skills and equipment capable of manufacturing the highest quality product at a competitive price. Our quality control team regularly visit our factories to ensure our high standards are always being met.

One stop shop

To save you time, we aim to provide complete systems at one purchase destination with the best price. Being a one stop shop also enables us to control the quality of the whole system. We consistently update catalogues and online capabilities to improve customer experiences.

Delivery to your door

With multiple distribution centres across the country with products in stock & dedicated delivery trucks, we aim to provide fast delivery every time. As well as utilising our own trucks, we've developed strong relationships with key transport providers across Australia so we can deliver even when the job is not so close to home.

Easy installation

We design products with installation considerations in mind to ensure they are as easy to install as possible to save you time on site. Many products offered have handy installation advantages built in.

Due to space restrictions, not all stock featured in this catalogue is stocked at all depots.

We recommend touching base with your closest depot prior to order placement if unsure.

The highest quality shower screen glass.

We have developed a reputation in the trade for supplying the highest quality tempered glass. Absolute attention to detail in production, packing and quality control mean clients can be assured of consistency of top quality products.

Glass factory

All steps in production process reach the highest quality levels.

Float glass

- All glass is processed from the same float glass supplier
- Quality and die batch of glass remains consistent
- Strict quality checks to ensure only conforming float glass is processed.

Double edge polishing machines

- Perfect polish and blemish free edges
- Horizontal double edge polishing machines give the finest edge finish
- Speed of glass through edging machine is monitored
- Quality control personnel check each sheet of glass
- Sophisticated water filtration system ensures clean water used during polishing.

Tempering oven

Toughened glass is made from annealed glass via a thermal tempering process. The glass is placed onto a roller table, taking it through a furnace that heats it above its annealing point of approx 700 °C. The glass is then rapidly cooled with forced air drafts. Of critical importance in glass processing is the tempering furnace used.

- Furnace used can toughen up to 2440 x 3600mm glass
- Specially designed furnace for heavy glass – Optimally toughens 8mm thick and above
- On-site mechanic ensures regular maintenance
- Punch testing of toughened glass every hour as per Australian Standards.

Tested & certified

Our 6mm, 8mm, 10mm & 12mm glass is tested and certified as complying with the requirements of Australian & New Zealand Standard 2208:1996 – Safety Glazing Material in Buildings.

Detailed quality control

At each stage of production (cutting, polishing, drilling, tempering and packing) dedicated Quality Control Personnel inspect each sheet of glass. Glass identified as not conforming to the highest quality standards is set aside.

In addition to skilled factory staff, Glass Outlet retains its own Quality Assurance people to review shipments. Random sampling of glass is undertaken to ensure compliance with detailed quality assurance specifications relating to glass surface finish, edge finish, labelling identification, packing specification and the like. Quality assurance reports are provided to Glass Outlet and the factory to ensure the highest standards are continually achieved and monitored.

Full ERP system implemented with each sheet barcoded: records kept to show exact time glass processed at each step of production = industry leading manufacturing.

GASP testing machine: MEASURING SURFACE STRESS IN TEMPERED GLASS to ensure optimal tensile surface strength. Testing with the GASP machine allows optimisation of furnace settings; ensures conformance to specifications and avoids under or over-stressing glass.

Attention to detail in packing

Shower glass panels are individually packed in cardboard cartons for extra protection in situations where shower panels must be moved through construction sites and/or confined spaces. With each panel in a protective cardboard box the chance of chipping or scratching glass prior to install is reduced significantly.

We're serious about quality, seriously.

Toughened shower glass is Grade "A" standard and proudly displays the Global Mark certified product mark.

We are authorised to display the Global Mark product conformance mark as confirmation that the manufacturing process is able to consistently produce glass in compliance with AS/NZS 2208: 1996 Safety Glazing Materials In Buildings.

Taking the extra steps

In addition to Global Mark conformance, Glass Outlet retains the services of SGS. SGS is internationally recognized as the leader for inspection, verification, testing and certification with 90,000 employees and 2000 offices globally.

Glass Outlet has retained SGS to review and audit factory compliance to detailed production requirements as set out by Global Mark in conjunction with requirements of AS/NZS 2208:1996.

Companies globally rely on SGS for independent third-party inspections, testing and auditing solutions to ensure products, services and processes comply with the latest quality standards.

The combined efforts of a world leading production facility, Global Mark conformance and independent auditing by SGS ensure Glass Outlet supplies industry leading quality.

The world's leading glass treatment now available & applied at Glass Outlet

REPELS WATER

WARRANTY

Ultimate protection

Optically clear, UV stable, chemical resistant, water and oil repellent

Reduces maintenance costs

EnduroShield keeps glass visibly cleaner for longer and reduces the frequency between cleans

Highly durable

Permanently bonds to the glass and comes with a true 10 year performance warranty*

Suits all glass ranges

From balustrading to pool fencing, high rise and domestic glazing, shower screens and insulated glass units, EnduroShield is the smart choice for glass

A permanent* coating that is both water and oil repellent

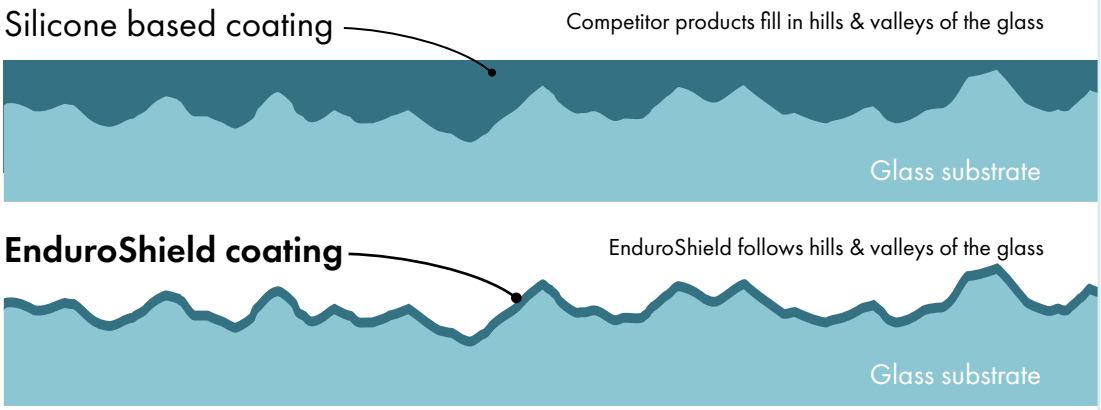

Silicone based sealers sit on top of the glass surface and can quickly wear off, leaving the surface unprotected. EnduroShield follows the hills and valleys of the glass, forming a strong, permanent* bond that does not flake or peel.

Testing and certification

*EnduroShield's performance has been independently tested by one of the leading global testing and certification houses, TÜV Rheinland in Germany for durability, easy-clean functionality, safety and quality. Testing was carried out to simulate a lifetime of 10 years on glass for both interior and exterior use, and EnduroShield passed all test.

www.tuv.com TÜVRheinland ID:0000033462

- **Easy to clean**
- **Durability tested**

*Contact us for warranty info and terms and conditions

How to place your EnduroShield order

Glass Outlet now offers an EnduroShield coating service in-house, applied by fully accredited and specially trained staff

Purchase our EnduroShield coating service as an optional extra on your next order!

This service can be purchased for job lot orders from all glass ranges from Glass Outlet, including project orders.

Enduroshield service is not available on Trilogy or Linea ranges.

Step 1

Place order for glass as normal

Step 2

Specify EnduroShield coating required

We have a FREE excel calculator which provides instant pricing.

Contact us for your copy

Step 3

We will provide you with a sales order confirmation of pricing with EnduroShield coating

Step 4

We will apply EnduroShield coating on both sides of glass in your order. Once coating has cured, glass will be ready for pick-up, delivery or freight as required

BIANCO

We ensure the highest quality finish on our most popular bright polished shower fittings

Brass is carefully chromed to ensure a perfect bright finish

Stainless steel surfaces are highly polished to a pristine mirror finish

Aluminium surfaces are bright polished to an immaculate finish

Glass to glass hinge

+ HEAVY DUTY HINGE OPTION

Wall to glass hinge

+ HEAVY DUTY HINGE OPTION

Offset wall to glass hinge

3 way "T" hinge

135° glass to glass hinge

Wall bracket

Offset wall bracket

Round wall bracket

Small glass brace

Large glass brace

Images & drawings are not to scale

Round slimline knob

Square L knob

Square recessed knob

Round notched knob

Round recessed knob

MECHANICALLY FIXED
brackets

A full range of mechanically fixed brackets

See **pages 32-33** for full range and specifications

Square D handle

D handle with knob

Horizontal D handle with knob

Small adjustable support arm

Door stop

Door bump stop
(satin finish)

Square horizontal support arm

Round horizontal support arm

Slimline aluminium water bar

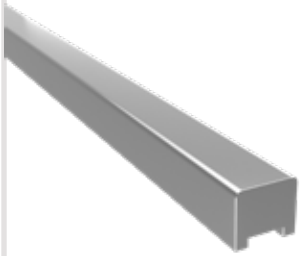

Rectangle aluminium water bar

Vertical support arm

U channels

Images & drawings are not to scale

Zürich

CHROME

This range integrates the latest manufacturing techniques to provide the highest quality products at the absolute best wholesale prices. Innovative manufacturing techniques provide the highest quality chrome finish at amazing low prices.

Glass to glass hinge

Wall to glass hinge

Glass to glass hinge
SUITS 6MM & 8MM GLASS

Wall to glass hinge
SUITS 6MM & 8MM GLASS

Offset wall to glass hinge

135° glass to glass hinge

90° glass to glass hinge

Round notched knob

Square notched knob

250mm handle

180mm handle

Images & drawings are not to scale

Zürich

PEARL SATIN CHROME

The pearl satin finish is an increasing trend in bathroom design with its reduced light reflectivity and more subtle tones

Glass to glass hinge

Wall to glass hinge

Offset wall to glass hinge

135° glass to glass hinge

90° glass to glass hinge

Round slimline knob

Round notched knob

Square notched knob

250mm handle

180mm handle

Door stop

Small adjustable support arm

Wall bracket

Offset wall bracket

Small glass brace

Large glass brace

U channels

Round horizontal support arm

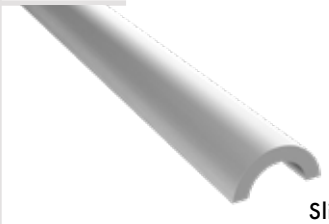

Slimline water bar

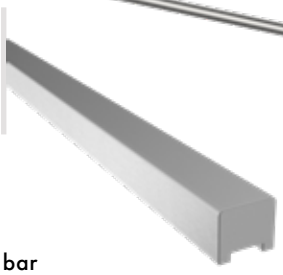

Rectangle aluminium water bar

Images & drawings are not to scale

NERO

SOLID BRASS
MATT BLACK HARDWARE

Our sophisticated coating process provides the highest quality matt black finish

Glass to glass hinge
+ HEAVY DUTY HINGE OPTION

Wall to glass hinge
+ HEAVY DUTY HINGE OPTION

90° glass to glass hinge

Offset wall to glass hinge

3 way "T" hinge

135° glass to glass hinge

Wall bracket

Offset wall bracket

Round wall bracket

Small glass brace

Large glass brace

Images & drawings are not to scale

ATTENTION TO DETAIL

We understand the importance of quality.

The Nero matt black surface has been salt spray tested by SGS Testing Services to 120 hours to ensure surface coating integrity.

Square L knob

Square recessed knob

Round notched knob

Round recessed knob

Round slimline knob

Square horizontal support arm

Small adjustable support arm

Slimline aluminium water bar

Rectangle aluminium water bar

MECHANICALLY FIXED brackets

A full range of mechanically fixed brackets

See **pages 32-33** for full range and specifications

Square D handle

U channels

Images & drawings are not to scale

ORO

Luxurious brushed brass/gold shower hardware offers an outstanding feature to any bathroom

With an increasing trend of incorporating earthy tones in bathroom renovations, the Oro range is an ideal design solution

Glass to glass hinge

Offset wall to glass hinge

Wall hinge

135 degree hinge

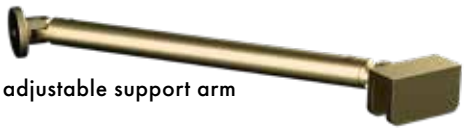

Small adjustable support arm

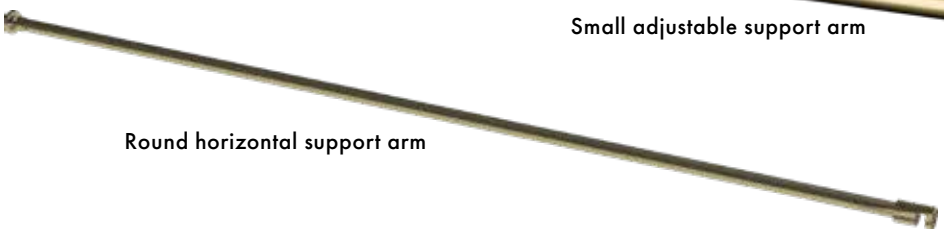

Round horizontal support arm

U channels

Wall bracket

Offset wall bracket

Small glass brace

Large glass brace

Round slimline knob

Offset wall mechanically fixed bracket

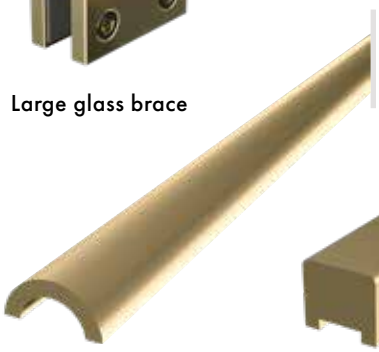

Slimline aluminium water bar

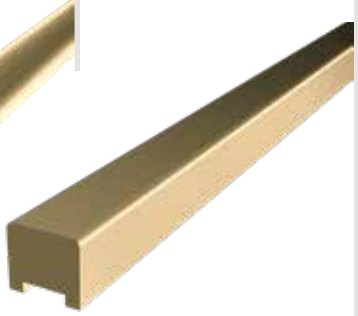

Rectangle aluminium water bar

Images & drawings are not to scale

SNO

Understated and contemporary – matt white is the ultimate modernist finish

With an increasing appeal to pare back and simplify, matt white is the new go to shade

Glass to glass hinge

Offset wall to glass hinge

Wall hinge

135 degree hinge

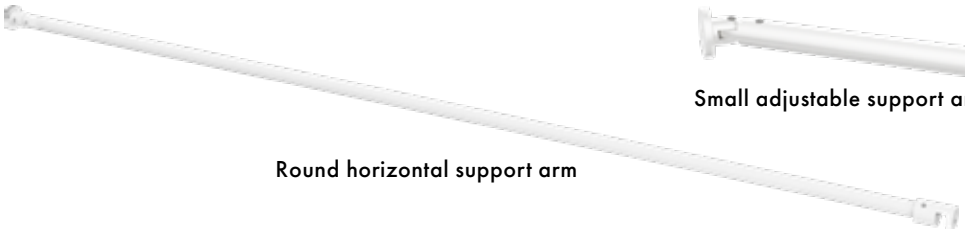

Round horizontal support arm

Small adjustable support arm

U channels

Wall bracket

Offset wall bracket

Small glass brace

Large glass brace

Round slimline knob

Offset wall mechanically fixed bracket

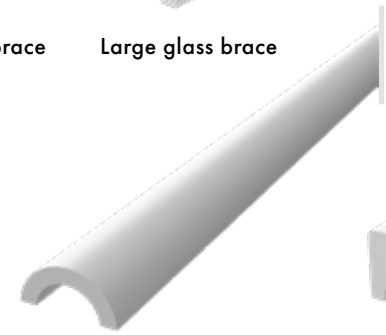

Slimline aluminium water bar

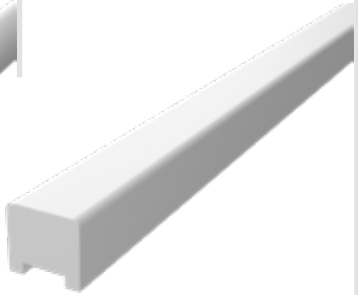

Rectangle aluminium water bar

Images & drawings are not to scale

GIO

Elegant, modern and earthy

A stylish twist on the matt black trend – gunmetal grey is the perfect in-between finish

Glass to glass hinge

Offset wall to glass hinge

Wall hinge

135 degree hinge

Round horizontal support arm

Small adjustable support arm

Wall bracket

Offset wall bracket

Small glass brace

Large glass brace

U channels

Round slimline knob

Offset wall mechanically fixed bracket

Slimline aluminium water bar

Images & drawings are not to scale

NiKL

A contemporary take on the classic chrome finish – brushed nickel is the new modern

Metallic and earthy, brushed nickel suits any decor for a serene finish

Glass to glass hinge

Offset wall to glass hinge

Wall hinge

135 degree hinge

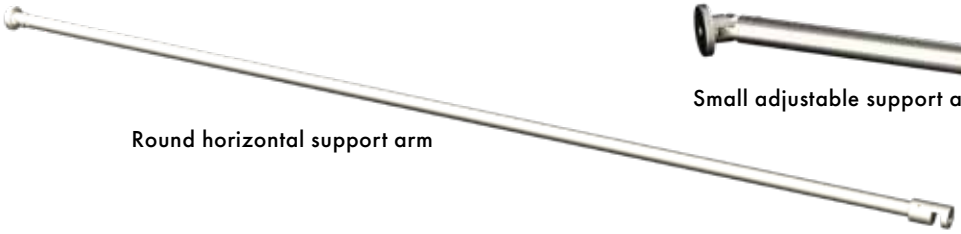

Round horizontal support arm

Small adjustable support arm

U channels

Wall bracket

Offset wall bracket

Small glass brace

Large glass brace

Round slimline knob

Offset wall mechanically fixed bracket

Slimline aluminium water bar

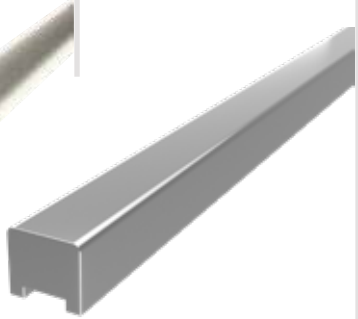

Rectangle aluminium water bar

Images & drawings are not to scale

HINGES

Suits 8mm & 10mm glass panels

1 Optimised hinge plate
Hinge plate hole distance optimised for maximum clamping action

2 Grub screws secured with Loctite
For precaution, Loctite is used to secure threaded grub screws

3 Allen key head screws
For ease of installation and to minimise scratching caused by flat head screwdrivers, allen key head screws are used

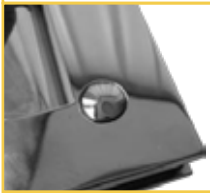

FREE plastic screw cap covers included

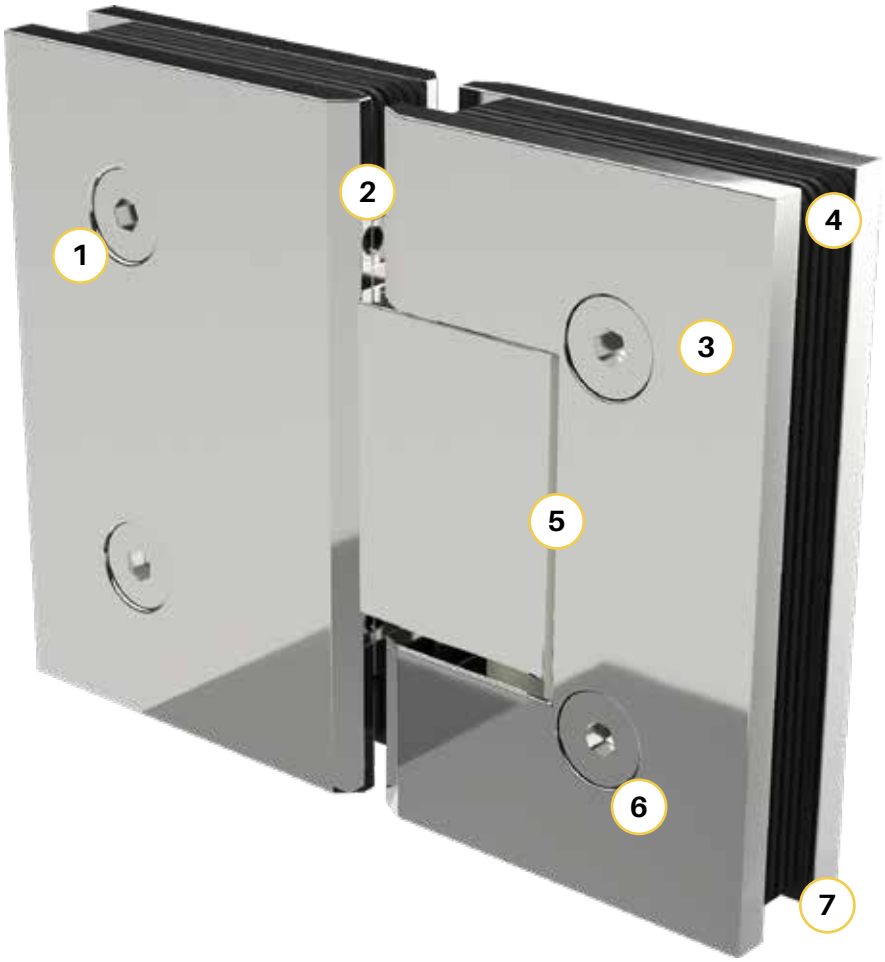

GLASS CUT OUT DETAIL
This cut out applies to all hinges
excluding heavy duty hinges & 6mm Zurich hinges

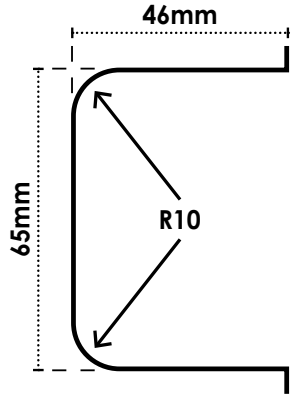

4 Superior quality EPDM gaskets
Gaskets are preglued to the hinges and overlapping plates for easy installation

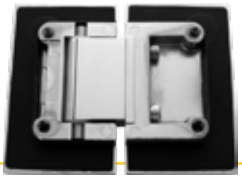

5 Scratch protectors
Neatly positioned protectors to prevent issues when hinge opens and closes

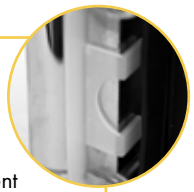

6 Knurled back screws
Advantage of superior locking action to prevent screws working loose

7 Smart clamping plate design
Recessed clamping plate ensures perfect fit to hinge body

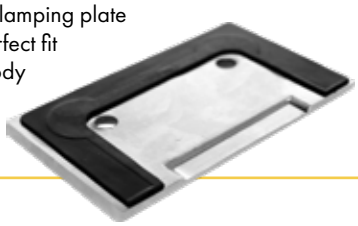

Spring design
Durable tempered stainless steel spring

Sealed spring cavity
Innovative hinge design allows spring cavity to be completely sealed which prevents water penetration into cavity

Images & drawings are not to scale

PURITY HINGES

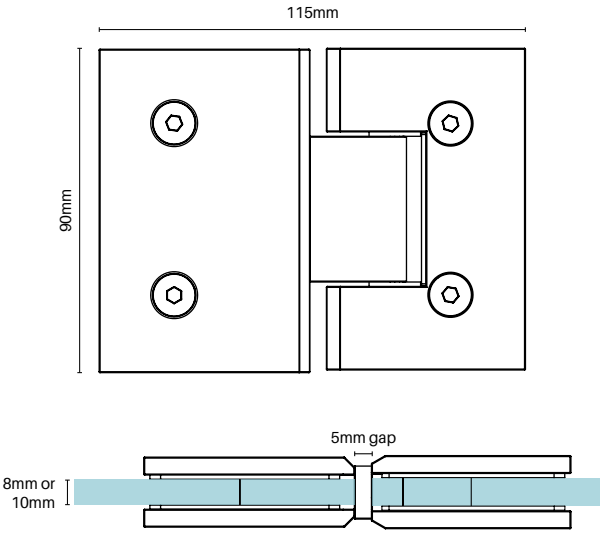

Purity Showerscreens® glass to glass hinge

SQUARE EDGE

Chrome plated, matt black, brushed brass/gold, matt white, gunmetal & brushed nickel finish

Order Code: **PB-H-180 (Bianco – Chrome)**
PN-H-180 (Nero – Black)
P-ORO-H-180 (Oro – Brushed Brass/Gold)
P-SNO-H-180 (Sno – White)
P-GIO-H-180 (Gio – Gunmetal)
P-NIKL-H-180 (Nikl – Brushed Nickel)

- Square finish edges
- Suitable for 8mm and 10mm glass
- "D" style glass cutouts
- Self closing from approximately 25°
- Dual action – opens inwards and outwards
- Manufactured in solid brass
- Allen key and gaskets included
- Specially designed strong clamping plate with pre-glued EPDM gasket

Max door weight	35kg per pair
Max door width	800mm

BIANCO NERO ORO SNO GIO NiKL

ZÜRICH HINGES

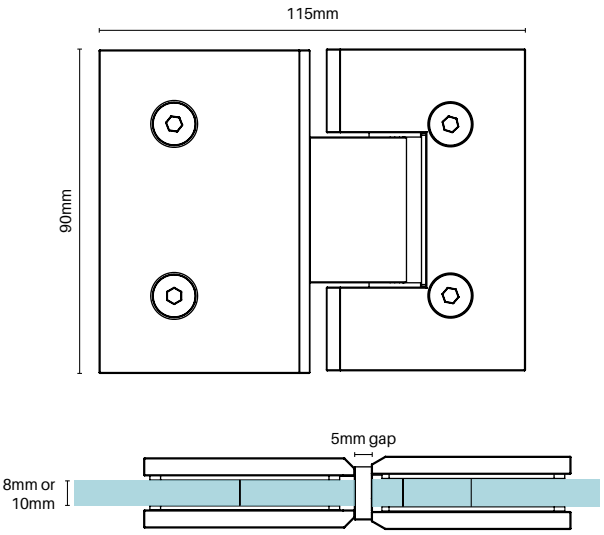

Zürich glass to glass hinge

SQUARE EDGE

Chrome plated or pearl satin chrome finish

Order Code: **ZUR-H-180 (Chrome)**
ZUR-PEARL-H-180 (Pearl satin)

- Outstanding price point
- Square finish edges
- Suitable for 8mm and 10mm glass
- "D" style glass cutouts
- Self closing from approximately 25°
- Dual action – opens inwards and outwards
- Brass centre block with solid precision clamping plates
- Special tempered SS304 square spring coil. Provides consistent long lasting opening and closing function
- Allen key and gaskets included
- Specially designed strong clamping plate with pre-glued EPDM gasket

Max door weight	35kg per pair
Max door width	800mm

PEARL SATIN

CHROME

Images & drawings are not to scale

PURITY HINGES

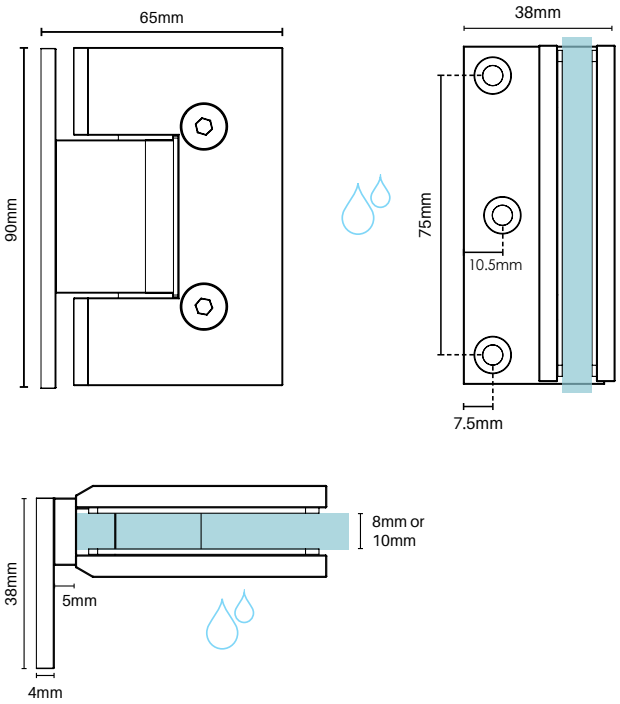

Purity Showerscreens® offset wall to glass hinge

SQUARE EDGE

Chrome plated, matt black, brushed brass/gold, matt white, gunmetal & brushed nickel finish

Order Code: **PB-H-OP (Bianco – Chrome)**
PN-H-OP (Nero – Black)
P-ORO-H-OP (Oro – Brushed Brass/Gold)
P-SNO-H-OP (Sno – White)
P-GIO-H-OP (Gio – Gunmetal)
P-NIKL-H-OP (Nikl – Brushed Nickel)

- Offset wall plate with 3x fixing holes – Square finish edges
- Suitable for 8mm and 10mm glass
- "D" style glass cutouts
- Self closing from approximately 25°
- Dual action – opens inwards and outwards
- Manufactured in solid brass
- 3x fixing screws, allen key and gaskets included
- Specially designed strong clamping plate with pre-glued EPDM gasket

Max door weight	35kg per pair
Max door width	800mm

BIANCO NERO ORO SNO GIO NiKL

ZÜRICH HINGES

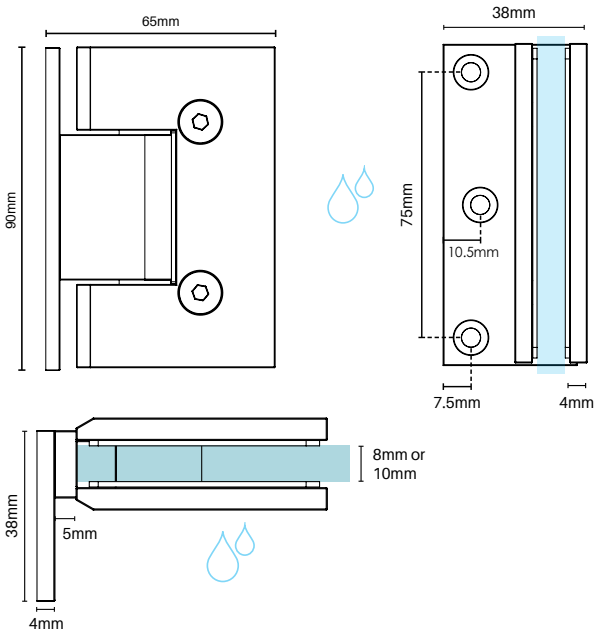

Zürich offset wall to glass hinge

SQUARE EDGE

Chrome plated or pearl satin chrome finish

Order Code: **ZUR-H-OP (Chrome)**
ZUR-PEARL-H-OP (Pearl satin)

- Outstanding price point
- Offset wall plate with 3x fixing holes – Square finish edges
- Suitable for 8mm and 10mm glass
- "D" style glass cutouts
- Self closing from approximately 25°
- Dual action – opens inwards and outwards
- Brass centre block & wall plate with solid precision clamping plates
- Special tempered SS304 square spring coil. Provides consistent long lasting opening and closing function
- 3x fixing screws, allen key and gaskets included
- Specially designed strong clamping plate with pre-glued EPDM gasket

Max door weight	35kg per pair
Max door width	800mm

PEARL SATIN

CHROME

Images & drawings are not to scale

PURITY HINGES

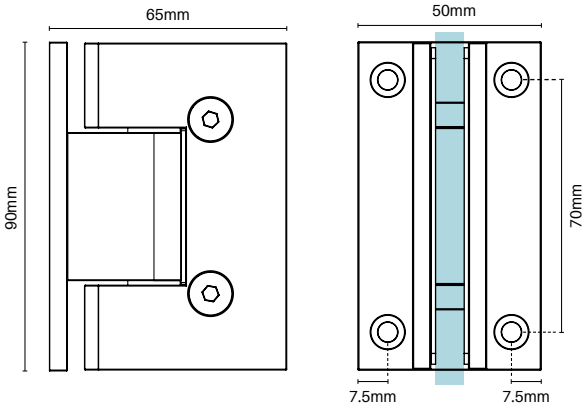

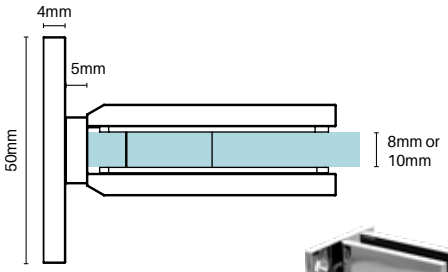

Purity Showerscreens® wall to glass hinge

SQUARE EDGE

Chrome plated, matt black, brushed brass/gold, matt white, gunmetal & brushed nickel finish

Order Code: **PB-H-WP (Bianco – Chrome)**
PN-H-WP (Nero – Black)
P-ORO-H-WP (Oro Brushed Brass/Gold)
P-SNO-H-WP (Sno – White)
P-GIO-H-WP (Gio – Gunmetal)
P-NIKL-H-WP (Nikl – Brushed Nickel)

- Wall plate with 4x fixing holes – Square finish edges
- Suitable for 8mm and 10mm glass
- "D" style glass cutouts
- Self closing from approximately 25°
- Dual action – opens inwards and outwards
- Manufactured in solid brass
- 4x fixing screws, allen key and gaskets included
- Specially designed strong clamping plate with pre-glued EPDM gasket

Max door weight	35kg per pair
Max door width	800mm

BIANCO NERO ORO SNO GIO NIKL

ZÜRICH HINGES

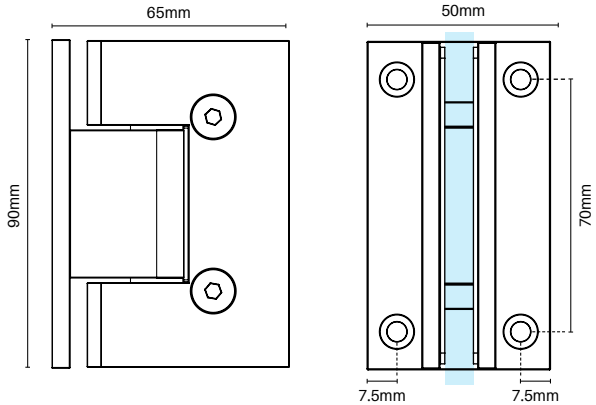

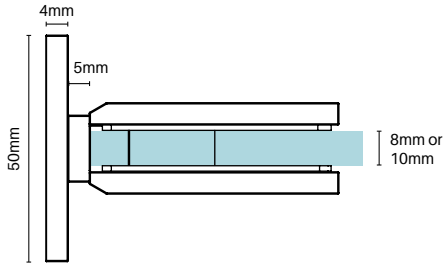

Zürich wall to glass hinge

SQUARE EDGE

Chrome plated or pearl satin chrome finish

Order Code: **ZUR-H-WP (Chrome)**
ZUR-PEARL-H-WP (Pearl satin)

- Outstanding price point
- Wall plate with 4x fixing holes – Square finish edges
- Suitable for 8mm and 10mm glass
- "D" style glass cutouts
- Self closing from approximately 25°
- Dual action – opens inwards and outwards
- Brass centre block & wall plate with solid precision clamping plates
- Special tempered SS304 square spring coil. Provides consistent long lasting opening and closing function
- 4x fixing screws, allen key and gaskets included
- Specially designed strong clamping plate with pre-glued EPDM gasket

Max door weight	35kg per pair
Max door width	800mm

PEARL SATIN

CHROME

Images & drawings are not to scale

PURITY HINGES

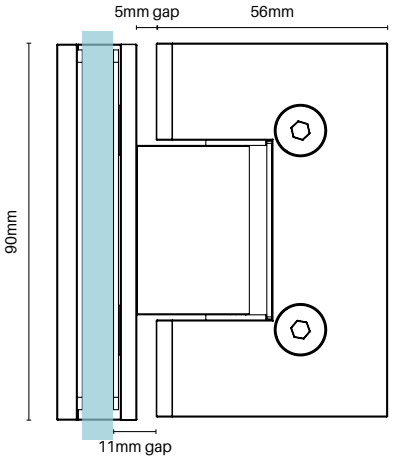

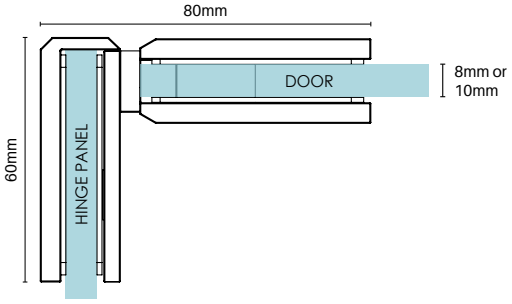

Purity Showerscreens® 90° glass to glass hinge

SQUARE EDGE

Matt black finish

Order Code: **PN-H-90 (Nero – Black)**

- Square finish edges
- Suitable for 8mm and 10mm glass
- "D" style glass cutouts
- Self closing from approximately 25°
- Dual action – opens inwards and outwards
- Manufactured in solid brass
- Specially designed strong clamping plate with pre-glued EPDM gasket
- Enables hinging of door at 90°

Max door weight	35kg per pair
Max door width	800mm

NERO

ZÜRICH HINGES

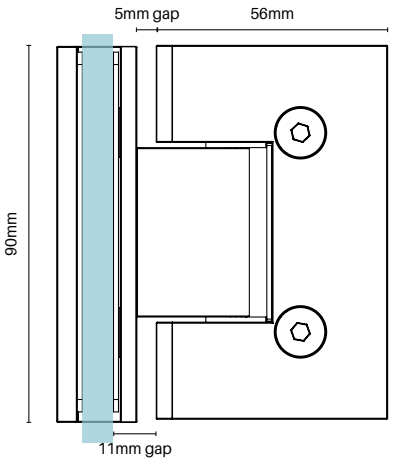

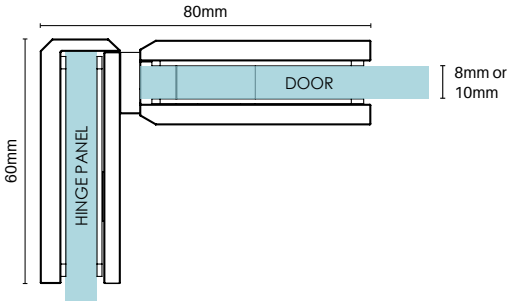

Zürich 90° glass to glass hinge

SQUARE EDGE

Chrome plated or pearl satin chrome finish

Order Code: **ZUR-H-90 (Chrome)**
ZUR-PEARL-H-90 (Pearl satin)

- Square finish edges
- Suitable for 8mm and 10mm glass
- "D" style glass cutouts
- Self closing from approximately 25°
- Dual action – opens inwards and outwards
- Brass centre block with solid precision clamping plates
- Special tempered SS304 square spring coil. Provides consistent long lasting opening and closing function
- Specially designed strong clamping plate with pre-glued EPDM gasket

Max door weight	35kg per pair
Max door width	800mm

PEARL SATIN

CHROME

Images & drawings are not to scale

PURITY HINGES

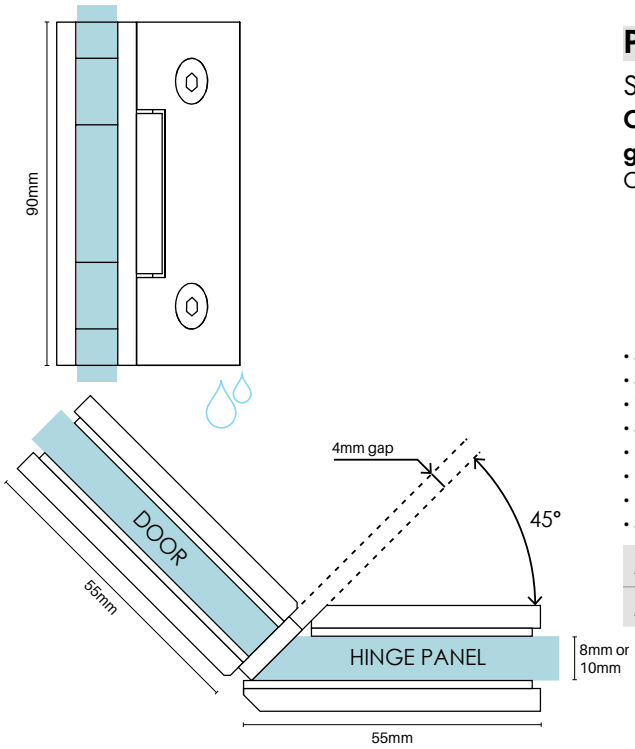

Purity Showerscreens® 135° glass to glass hinge

SQUARE EDGE

Chrome plated, matt black, brushed brass/gold, matt white, gunmetal & brushed nickel finish

Order Code: **PB-H-135 (Bianco – Chrome)**
PN-H-135 (Nero – Black)
P-ORO-H-135 (Oro – Brushed Brass/Gold)
P-SNO-H-135 (Sno – White)
P-GIO-H-135 (Gio – Gunmetal)
P-NIKL-H-135 (Nikl – Brushed Nickel)

- Square finish edges
- Suitable for 8mm and 10mm glass
- "D" style glass cutouts
- Self closing from approximately 25°
- Dual action – opens inwards and outwards
- Manufactured in solid brass
- Hinge panel glass requires 45° polished mitre edge on 1 x long edge
- Specially designed strong clamping plate with pre-glued EPDM gaskets

Max door weight	35kg per pair
Max door width	800mm

BIANCO NERO ORO SNO GIO NIKL

ZÜRICH HINGES

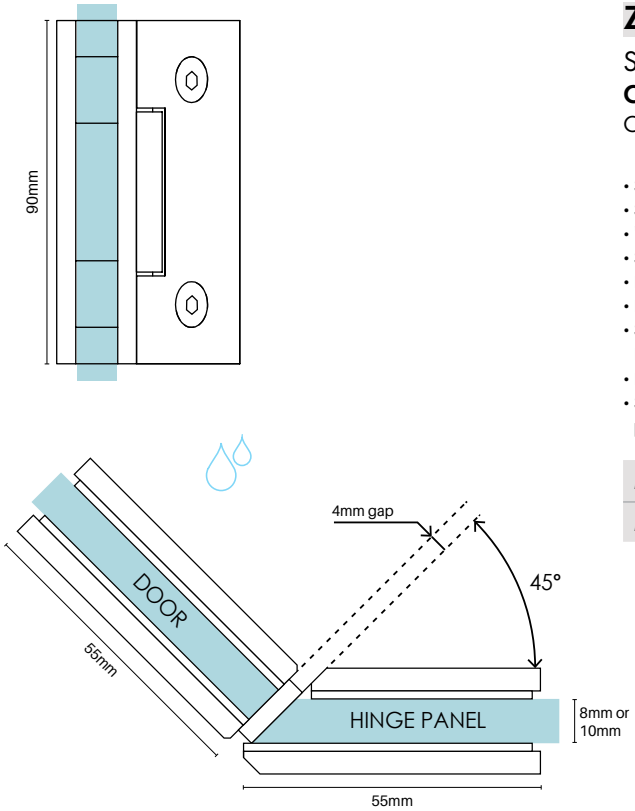

Zürich 135° glass to glass hinge

SQUARE EDGE

Chrome plated or pearl satin chrome finish

Order Code: **ZUR-H-135 (Chrome)**
ZUR-PEARL-H-135 (Pearl satin)

- Square finish edges
- Suitable for 8mm and 10mm glass
- "D" style glass cutouts
- Self closing from approximately 25°
- Dual action – opens inwards and outwards
- Brass centre block with solid precision clamping plates
- Special tempered SS304 square spring coil. Provides consistent long lasting opening and closing function
- Hinge panel glass requires 45° polished mitre edge on 1 x long edge
- Specially designed strong clamping plate with pre-glued EPDM gasket

Max door weight	35kg per pair
Max door width	800mm

PEARL SATIN

CHROME

Images & drawings are not to scale

PURITY HINGES

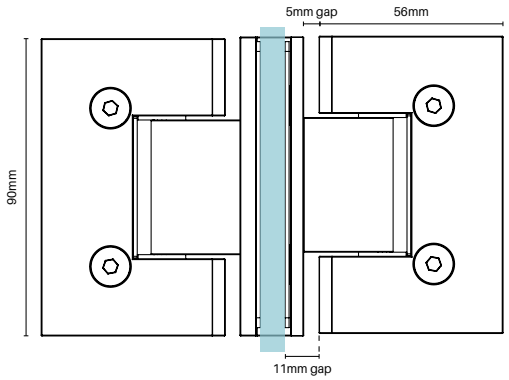

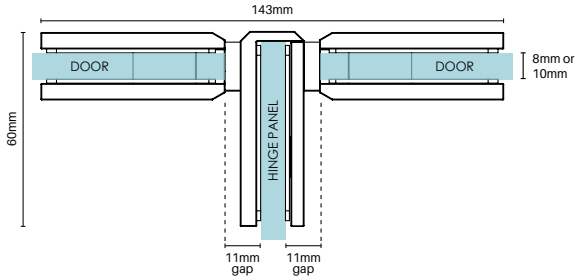

Purity Showerscreens® 3 way glass to glass hinge

SQUARE EDGE

Chrome plated or matt black finish

Order Code: **PB-H-3W (Bianco – Chrome)**
PN-H-3W (Nero – Black)

- Allows for hinging of 2 x doors from 1 x hinge panel
- Square finish edges
- Suitable for 8mm & 10mm glass
- "D" style glass cutouts
- Dual action – opens inwards & outwards
- Manufactured in solid brass
- Clamping plates pre-glued with EPDM gaskets for easy fitting

Max door weight	35kg per pair
Max door width	800mm

BIANCO

NERO

PURITY HEAVY DUTY HINGES

- Larger & thicker clamping plates & internal SS304 spring
- Removeable pins provide optional use of 'mickey mouse' glass cut outs

HEAVY DUTY BIANCO / NERO

Purity Showerscreens® glass to glass hinge

HEAVY DUTY / SQUARE EDGE

Chrome plated or matt black

Order Code: **PB-H-180-HD (Bianco – Chrome)**
PN-H-180-HD (Nero – Black)

- Heavy duty hinges for larger doors
- Square finish edges
- Suitable for 8mm, 10 & 12mm glass
- "D" style glass cutouts OR 'mickey mouse' cutouts
- Includes screw-in pins for 'mickey mouse' – simply unscrew & remove for "D" cut outs
- Dual action – opens inwards & outwards
- Manufactured in solid brass
- Clamping plates pre-glued with EPDM gaskets for easy fitting

Max door weight	50kg 2x hinges
	65kg 3x hinges
Max door width	915mm

GLASS CUT OUT DETAIL

Cut out applies to heavy duty hinge styles

"D" CUTOUT

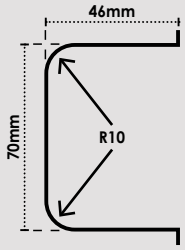

— OR —

MICKEY MOUSE CUTOUT

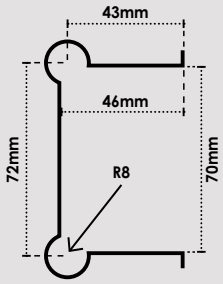

Hinge cannot be used with pre-made Purity stocked glass doors – cut out for glass is different for heavy duty hinges

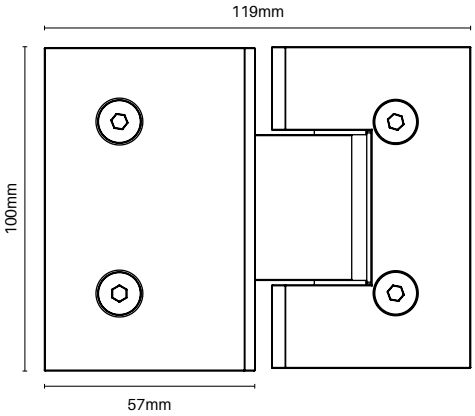

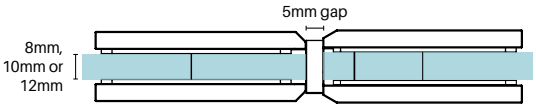

HEAVY DUTY BIANCO / NERO

Purity Showerscreens® wall to glass hinge

HEAVY DUTY / SQUARE EDGE

Chrome plated or matt black finish

Order Code: **PB-H-WP-HD (Bianco – Chrome)**
PN-H-WP-HD (Nero – Black)

SEE CUT OUT DETAILS FOR HEAVY DUTY HINGES ABOVE

Hinge cannot be used with pre-made Purity stocked glass doors – cut out for glass is different for heavy duty hinges

- Heavy duty wall hinges for larger doors
- 4 x fixing holes
- Square finish edges
- Suitable for 8mm, 10 & 12mm glass
- "D" style glass cutouts OR "mickey mouse" cutouts
- Includes screw-in rods for "mickey mouse" – simply unscrew & remove for "D" cut outs
- Dual action – opens inwards & outwards
- Manufactured in solid brass

Max door weight	50kg 2x hinges
	65kg 3x hinges
Max door width	915mm

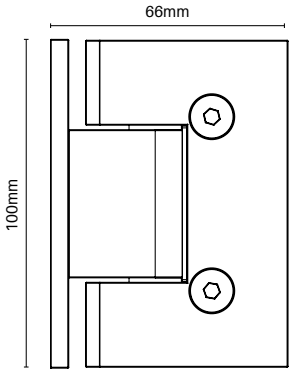

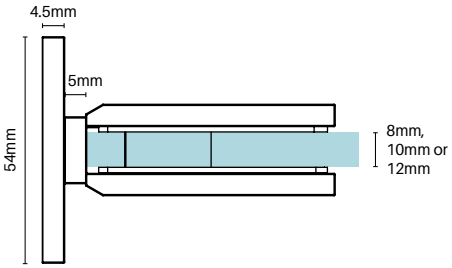

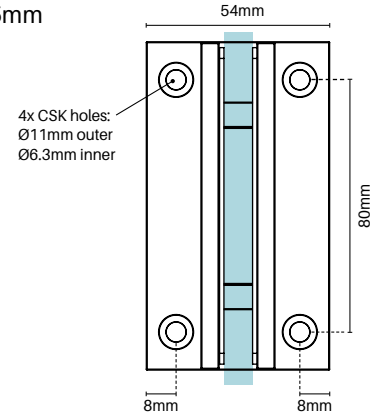

Images & drawings are not to scale

ZÜRICH HINGES **SUITS 6MM GLASS**

Zürich 6mm glass to glass hinge

SQUARE EDGE

Chrome plated or matt black finish

Order Code: **ZUR-H-180-6MM (Chrome)**
ZUR-H-180-6MM-BLK (Black)

- Square finish edges with radius corners
- Suitable for 6mm & 8mm glass
- Specially designed strong clamping plates with pre-glued EPDM gaskets
- Self closing from approximately 25°
- Dual action – opens inwards & outwards
- Allen key & screw cover caps included

Max door weight	30kg per pair
Max door width	800mm

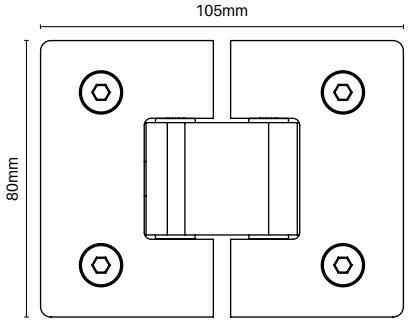

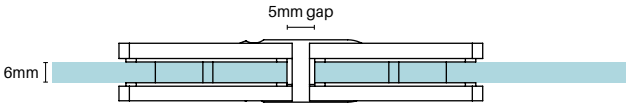

GLASS CUT OUT DETAIL

This cut out applies to Zurich 6mm hinges

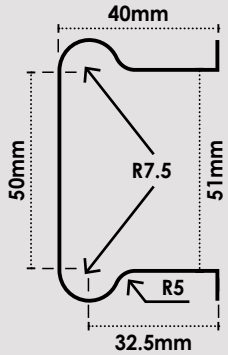

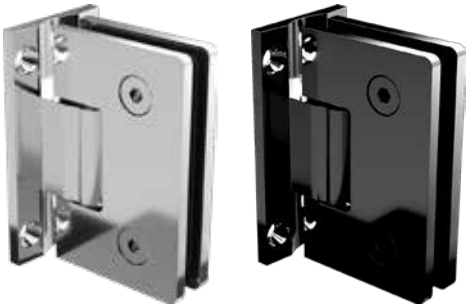

Zürich 6mm wall to glass hinge

SQUARE EDGE

Chrome plated or matt black finish

Order Code: **ZUR-H-WP-6MM (Chrome)**
ZUR-H-WP-6MM-BLK (Black)

- Square finish edges with radius corners
- Suitable for 6mm & 8mm glass
- Specially designed strong clamping plates with pre-glued EPDM gaskets
- Self closing from approximately 25°
- Dual action – opens inwards & outwards
- 4x SS304 fixing screws with wall plugs, allen key & screw cover caps included

Max door weight	30kg per pair
Max door width	800mm

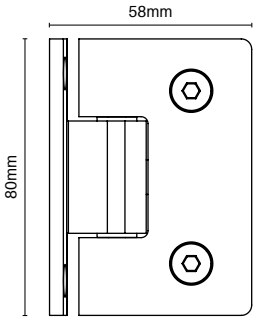

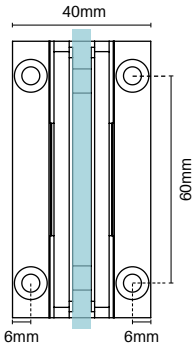

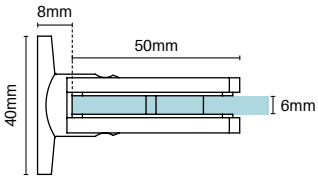

Images & drawings are not to scale

WALL BRACKETS

Suits 8mm & 10mm glass panels

1 2mm rear wall thickness

Thin back wall to minimise gap between wall and glass panel

2 Interior packers

Moulded plastic packer fits to interior back and side walls to prevent glass from touching metal

3 Countersunk internal back hole

Flush screw fixing with countersunk hole

(1x wall screw with plug included in box)

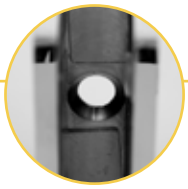

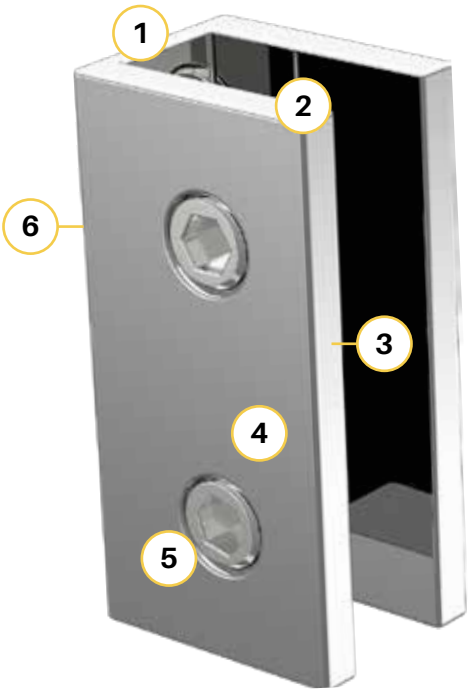

ALSO AVAILABLE

BRACKET TO SUIT 6MM GLASS

4 Superior manufactured finish

Superior blemish free

Available in a range of finishes

5 Allen key head screws

2x hex head screws for secure friction fitting to glass panel. Internal screw heads are flat with plastic capping

6 Clear PVC back packer

Thin clear PVC affixed to back of bracket to minimise issues when installing to a tiled surface

Images & drawings are not to scale

PURITY GLASS BRACKETS

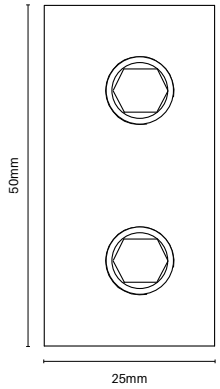

Purity Showerscreens® wall bracket

SQUARE EDGE

Chrome plated, matt black, brushed brass/gold, matt white, gunmetal, brushed nickel & pearl satin finish

Order Code: **P-WB (Bianco – Chrome)**
PN-WB (Nero – Black)
P-ORO-WB (Oro – Brushed Brass/Gold)
P-SNO-WB (Sno – White)
P-GIO-WB (Gio – Gunmetal)
P-NIKL-WB (Nikl – Brushed Nickel)
P-PEARL-WB (Pearl satin)

- Wall bracket – concealed central countersunk fixing
- Suitable for 8mm & 10mm glass
- 2x compression/friction screws – quick and flexible installation as no holes in glass required
- Slimline 2mm rear wall reduces silicone gap between wall and glass panel
- 1x fixing screw & wall plug provided

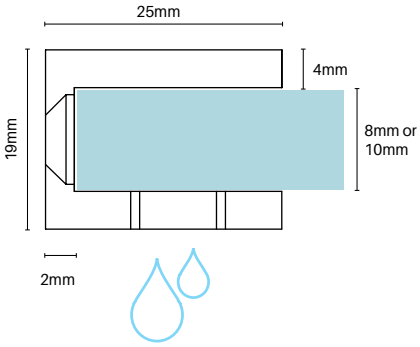

BIANCO NERO ORO SNO GIO NiKL PEARL SATIN

*Silicone must be used along glass edges when friction brackets used

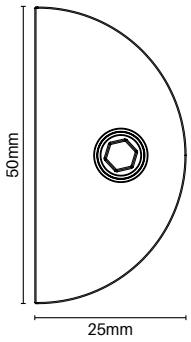

Purity Showerscreens® round wall bracket

Chrome plated or matt black finish

Order Code: **P-WB-RND (Bianco – Chrome)**
PN-WB-RND (Nero – Black)

- Stylish wall bracket with concealed countersunk fixing
- Slimline half round profile
- Suitable for 8mm and 10mm glass – no holes in glass required
- Slimline 2.5mm rear wall thickness reduces silicone gap
- 1x screw & wall plug provided

BIANCO NERO

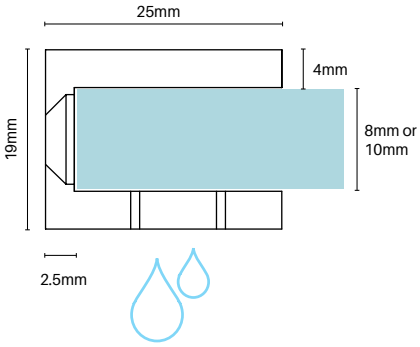

*Silicone must be used along glass edges when friction brackets used

Images & drawings are not to scale

PURITY GLASS BRACKETS

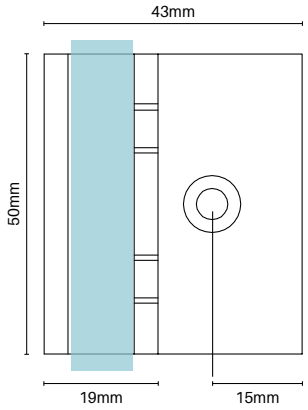

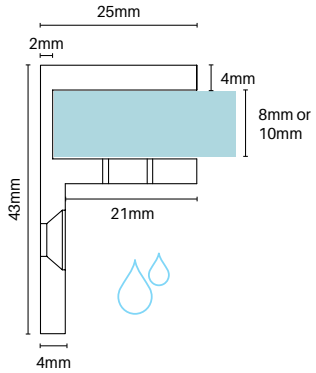

*Silicone must be used along glass edges when friction brackets used

Purity Showerscreens® offset wall bracket

SQUARE EDGE

Chrome plated, matt black, brushed brass/gold, matt white, gunmetal, brushed nickel & pearl satin finish

Order Code: **P-WB-O (Bianco – Chrome)**
PN-WB-O (Nero – Black)
P-ORO-WB-O (Oro – Brushed Brass/Gold)
P-SNO-WB-O (Sno – White)
P-GIO-WB-O (Gio – Gunmetal)
P-NIKL-WB-O (Nikl – Brushed Nickel)
P-PEARL-WB-O (Pearl satin)

- Wall bracket - with offset leg
- Suitable for 8mm & 10mm glass
- 2x compression/friction screws - quick and flexible installation as no holes in glass required
- Offset leg is useful when affixing glass close to corner by positioning fixing screw away from wall edge
- 1x fixing screw & wall plug provided

BIANCO NERO ORO SNO GIO NiKL PEARL SATIN

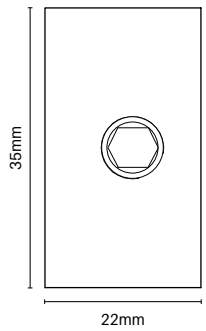

Purity Showerscreens® 6mm wall bracket

Chrome plated – Square edge

Order Code: **P-WB-6MM (Bianco – Chrome)**

- Wall bracket to suit 6mm thick toughened glass
- Single concealed countersunk fixing to wall
- 1 x compression/friction screw - quick and flexible install. No holes in glass required
- Slimline 2.4mm rear wall reduces silicone gap between wall and glass panel

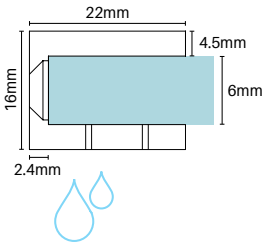

*Silicone must be used along glass edges when friction brackets used

BIANCO

Images & drawings are not to scale

MECHANICALLY FIXED GLASS BRACKETS

Ideal for large shower panels

BIANCO NERO

Purity square wall bracket

Chrome plated or matt black finish

Order Code: P-MECH-WB (Bianco – Chrome)
PN-MECH-WB (Nero – Black)

- Mechanical fixing of glass to wall
- Hidden single fixing to wall (SS304 wall fixing screw included)
- Suitable for 6mm, 8mm & 10mm glass

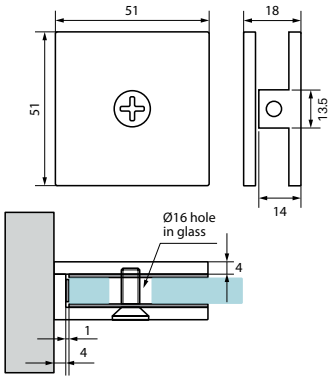

Glass may be made with cut out around rear wall 13.5mm plate to reduce gap between wall and glass panel

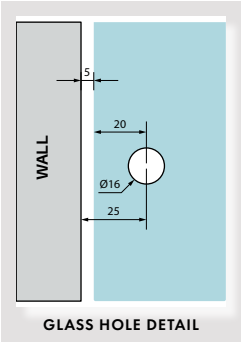

BIANCO NERO ORO

Purity square offset wall bracket

Chrome plated, matt black or brushed brass/gold finish

Order Code: P-MECH-WB-O (Bianco – Chrome)
PN-MECH-WB-O (Nero – Black)
P-ORO-MECH-WB-O (Oro – Brushed Brass/Gold)

- Mechanical fixing of glass to wall
- L plate offsets wall fixing (SS304 wall fixing screw included)
- Useful when fitting glass close to a corner
- Suitable for 6mm, 8mm & 10mm glass

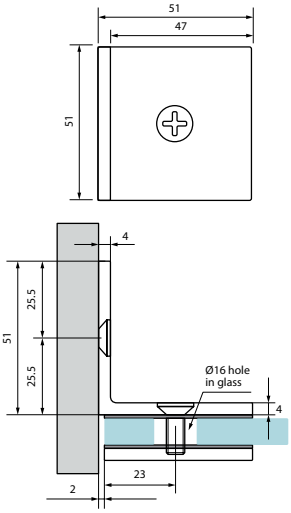

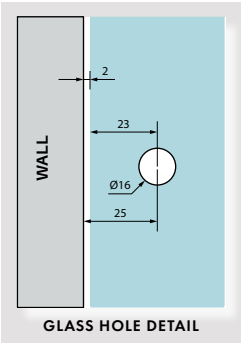

BIANCO NERO SNO GIO NiKL ORO PEARL SATIN

SLIMLINE LEG

Purity square slimline offset wall bracket

Chrome plated, matt black, matt white, gunmetal, brushed nickel & brushed brass/gold finish

Order Code: P-MECH-WB-SLO (Bianco – Chrome)
PN-MECH-WB-SLO (Nero – Black)
P-SNO-MECH-WB-SLO (Sno – White)
P-GIO-MECH-WB-SLO (Gio – Gunmetal)
P-NIKL-MECH-WB-SLO (Nikl – Brushed Nickel)
P-ORO-MECH-WB-SLO (Oro – Brushed Brass/Gold)
P-PEARL-MECH-WB-SLO (Pearl satin)

- Mechanical fixing of glass to wall
- Slimline L offset wall fixing (SS304 wall fix screw included)
- Slimline leg provides a neat, unobtrusive finish
- Useful when fitting glass close to a corner
- Suitable for 6mm, 8mm & 10mm glass

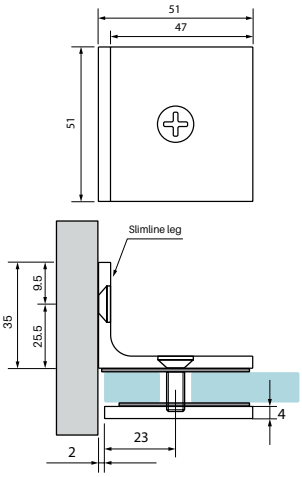

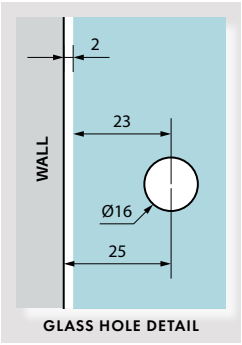

Images & drawings are not to scale

MECHANICALLY FIXED GLASS BRACKETS

Ideal for large shower panels

BIANCO

NERO

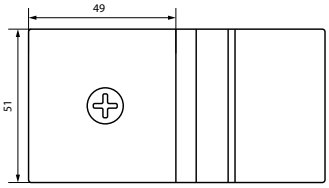

Purity square 135° bracket

Chrome plated or matt black finish

Order Code: P-MECH-GGB-135 (Bianco – Chrome)
PN-MECH-GGB-135 (Nero – Black)

- Mechanical fixing of glass panels at 135°
- Glass must be mitred at 22.5°
- Suitable for 6mm, 8mm & 10mm glass

Glass configuration

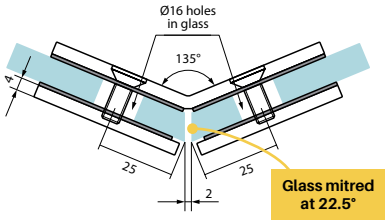

BIANCO

NERO

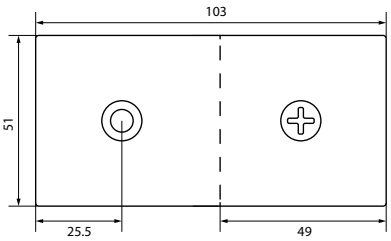

Purity square inline offset wall bracket

Chrome plated or matt black finish

Order Code: P-MECH-WB-IO (Bianco – Chrome)
PN-MECH-WB-IO (Nero – Black)

- Mechanical fixing of glass panels to inline wall configuration
- Easy fixing into wall (SS304 wall fixing screw included)
- Suitable for 6mm, 8mm & 10mm glass

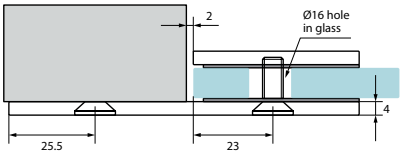

BIANCO

NERO

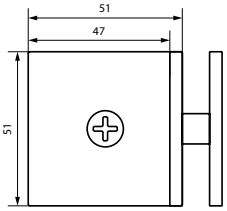

Purity square 90° bracket

Chrome plated or matt black finish

Order Code: P-MECH-GGB-90 (Bianco – Chrome)
PN-MECH-GGB-90 (Nero – Black)

- Mechanical fixing of glass panels at 90°
- Two glass configurations possible
- Suitable for 6mm, 8mm & 10mm glass

Glass configuration option 1

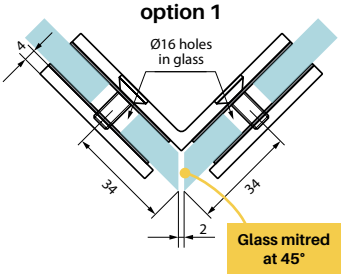

Glass configuration option 2

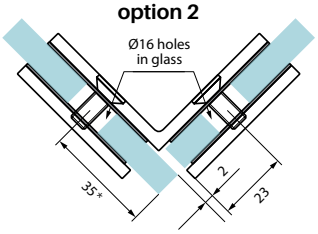

*This size is used when 8mm thick glass is selected

Images & drawings are not to scale

PURITY KNOBS

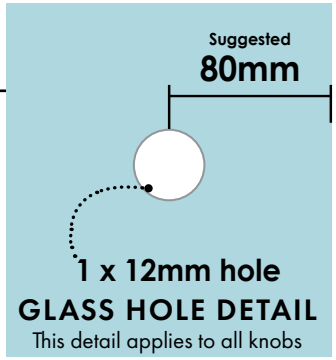

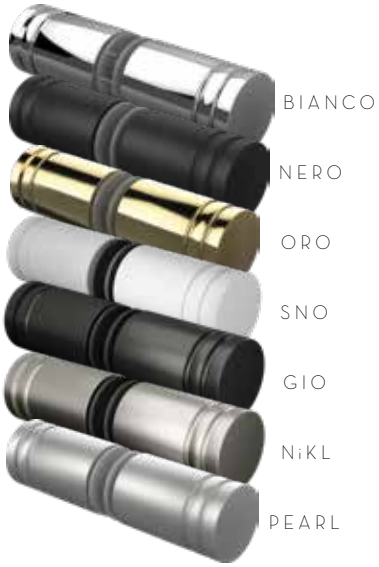

Purity Showerscreens® Round circular knob

Chrome plated, matt black, brushed brass/gold, matt white, gunmetal & brushed nickel finishes

Order Code: P-KRC (Bianco – Chrome)
PN-KRC (Nero – Black)
P-ORO-KRC (Oro – Brushed Brass/Gold)
P-SNO-KRC (Sno – White)
P-GIO-KRC (Gio – Gunmetal)
P-NIKL-KRC (Nikl – Brushed Nickel)
P-PEARL-KRC (Pearl satin)

- Solid round knob with two circular grooves
- Slimline Ø25mm double pull knob
- Suits 6mm, 8mm, 10mm and 12mm thick glass
- 30mm long per side

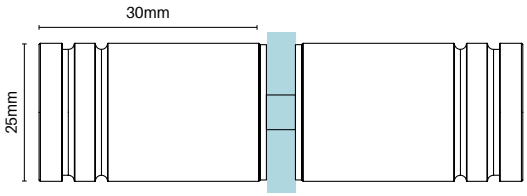

Purity Showerscreens® Full round knob

Chrome plated or matt black finish

Order Code: P-KRF (Bianco – Chrome)
PN-KRF (Nero – Black)

- Sleek solid round knob with finger notch
- Double pull knob
- Suits 8mm, 10mm and 12mm thick glass

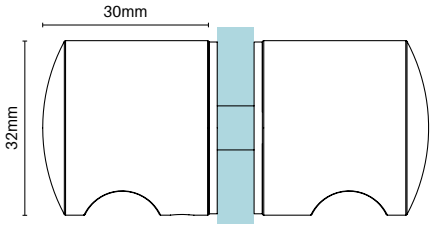

Purity Showerscreens® Round recessed knob

Chrome plated or matt black finish

Order Code: P-KRR (Bianco – Chrome)
PN-KRR (Nero – Black)

- Easy gripping with full finger notch
- Double pull knob
- Suits 8mm, 10mm and 12mm thick glass

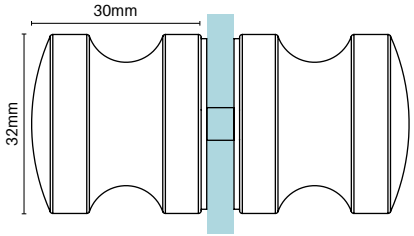

Purity Showerscreens® Square recessed knob

Chrome plated or matt black finish

Order Code: P-KSR (Bianco – Chrome)
PN-KSR (Nero – Black)

- Easy gripping with full finger notch
- Double pull knob
- Suits 8mm, 10mm and 12mm thick glass

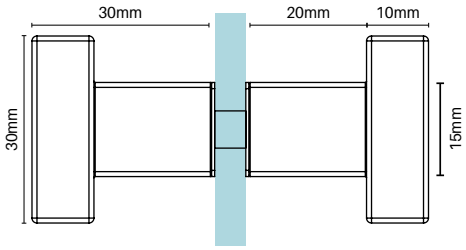

Purity Showerscreens® Square L shape knob

Chrome plated or matt black finish

Order Code: P-KSL (Bianco – Chrome)
PN-KSL (Nero – Black)

- L shape profile
- Double pull knob
- Suits 8mm, 10mm and 12mm thick glass

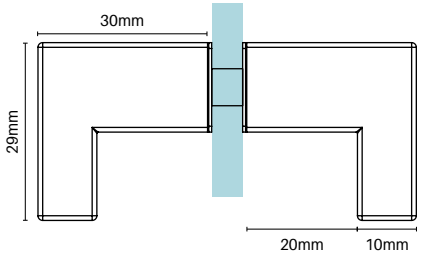

Images & drawings are not to scale

ZÜRICH KNOBS

Zürich round circular knob

Pearl satin finish

Order Code: **ZUR-PEARL-KRC (Pearl satin)**

- Slimline Ø25mm round knob with two circular grooves
- Double pull knob
- Suits 6mm, 8mm, 10mm and 12mm thick glass
- Pearl satin chrome
- 40mm long per side
- Outstanding price point

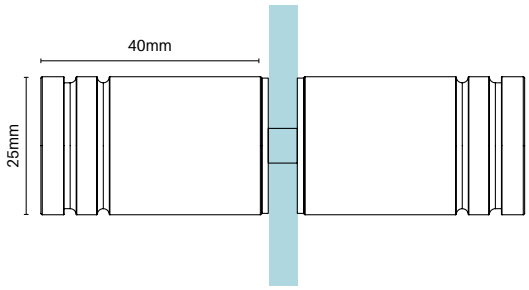

Zürich full round knob

Chrome plated or pearl satin finish

Order Code: **ZUR-KRF (Chrome)**
ZUR-PEARL-KRF (Pearl satin)

- Sleek round knob with finger notch
- Double pull knob
- Suits 8mm, 10mm and 12mm thick glass
- Polish or pearl satin chrome
- Outstanding price point

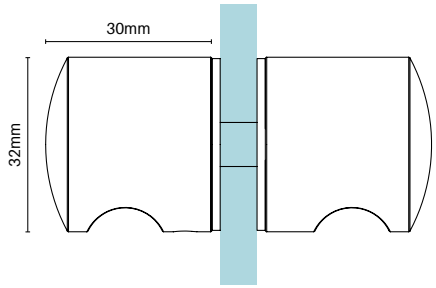

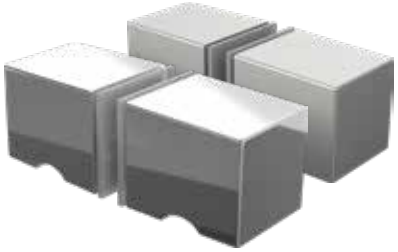

Zürich square recessed knob

Chrome plated or pearl satin finish

Order Code: **ZUR-KSF (Chrome)**
ZUR-PEARL-KSF (Pearl satin)

- Easy gripping with full finger notch
- Double pull knob
- Suits 8mm, 10mm and 12mm thick glass
- Polish or pearl satin chrome
- Outstanding price point

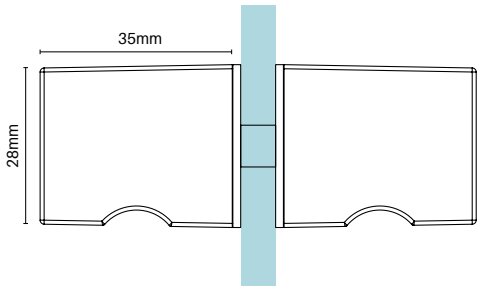

SOLID ALLOY KNOBS

Purity Showerscreens® Solid premium alloy round circular knob

Matt black

Order Code: **PN-KRC-AA (Nero – Black)**

- Round knob with two circular grooves
- Slimline Ø25mm double pull knob
- Suits 6mm, 8mm, 10mm and 12mm thick glass
- Premium alloy with precision CNC machining
- Superior corrosion resistance

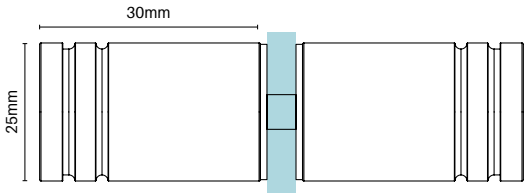

Purity Showerscreens® Solid premium alloy round recessed knob

Matt black

Order Code: **PN-KRR-AA (Nero – Black)**

- Easy gripping with full finger notch
- Double pull knob
- Suits 8mm, 10mm and 12mm thick glass
- Premium alloy with precision CNC machining
- Superior corrosion resistance

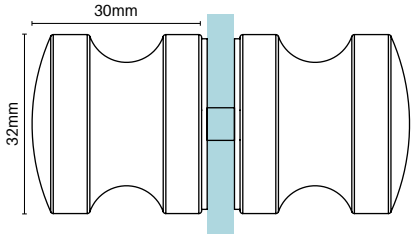

Images & drawings are not to scale

PURITY HANDLES

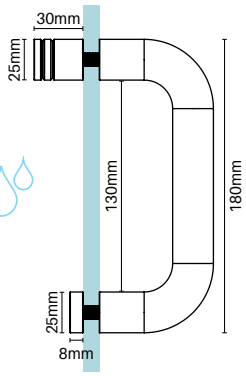

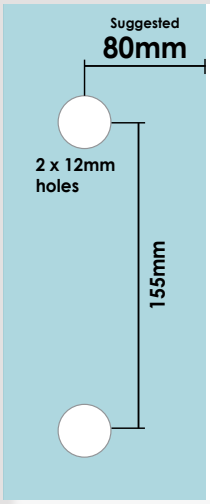

GLASS HOLE DETAIL

Purity Showerscreens® round D handle with internal knob

Polish SS304 – 180mm long

Order Code: **P-HANDLE-180 (180mm long)**

- Pull knob on inside of door panel with external D handle; Ø25mm
- Suits 8mm, 10mm and 12mm glass
- Manufactured in SS304; Polish finish
- Nylon spacers and gaskets included to prevent glass touching metal
- 180mm handle suits holes in modular Purity doors

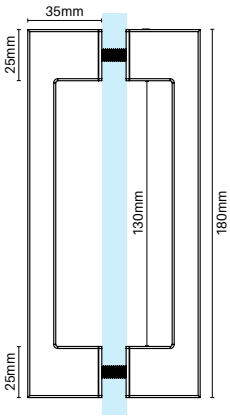

Purity Showerscreens® Square D handle

Polish SS304 or matt black finish

Order Code: **P-HD (Bianco – Chrome)**
PN-HD (Nero – Black)

- Back to back pull handle; suits 8mm, 10mm and 12mm glass
- Manufactured in SS304; Polish or matt black finish
- Nylon spacers and gaskets included to prevent glass touching metal
- Suits holes in modular purity doors

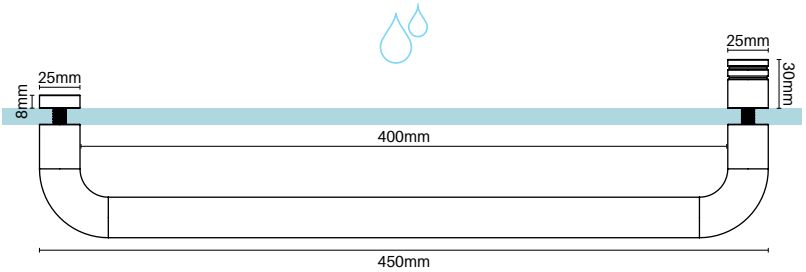

Purity Showerscreens® 450mm round D handle with internal knob

Polish SS304 – 450mm long

Order Code: **P-HANDLE-450 (450mm long)**

- Pull knob on inside of door panel with external D handle; Ø25mm
- Suits 8mm, 10mm and 12mm glass
- Manufactured in SS304; Polish finish
- Nylon spacers and gaskets included to prevent glass touching metal
- 450mm handle commonly installed horizontally with external D handle to be used as a towel rail - suits 425mm hole to hole centres
- May also be installed vertically (with holes in glass as required)
- Does not suit installation with modular glass door panels. Custom made glass is required

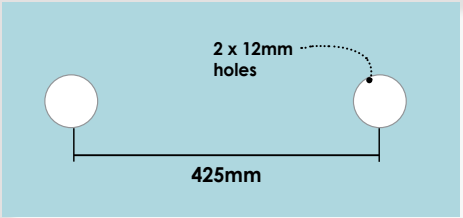

HORIZONTAL GLASS HOLE DETAIL

Images & drawings are not to scale

ZÜRICH HANDLES

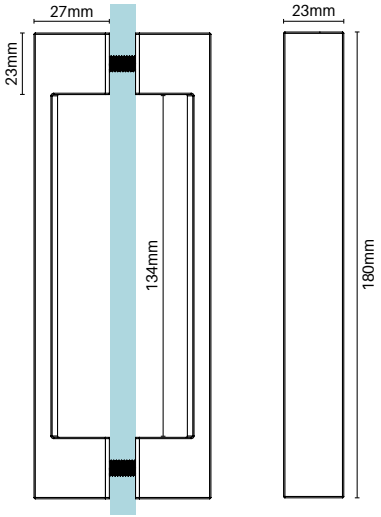

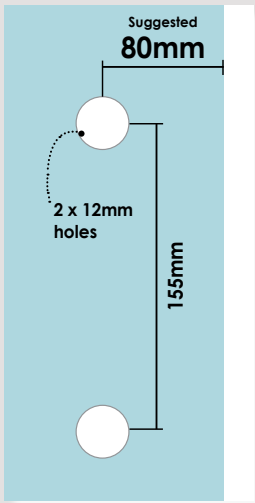

GLASS HOLE DETAIL

Zürich Square D handle – 180mm long

Chrome plated or pearl satin finish

Order Code: **ZUR-HD (Chrome)**
ZUR-PEARL-HD (Pearl satin)

- Latest European design with slimline square profile with inner rounded handle for easy gripping
- Back to back pull handle; suits 8mm, 10mm and 12mm glass
- Polish or pearl satin chrome finish
- Nylon spacers and gaskets included to prevent glass touching metal
- Suits holes in modular Purity doors

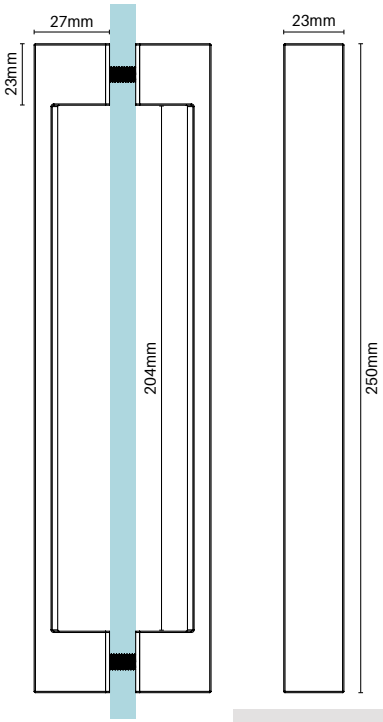

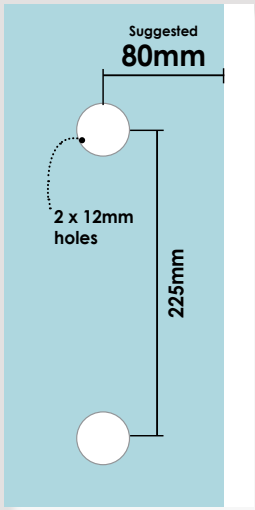

VERTICAL GLASS HOLE DETAIL

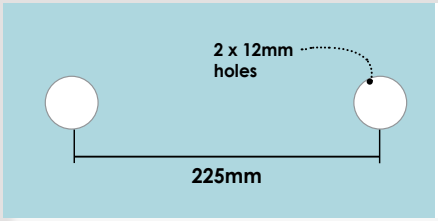

HORIZONTAL GLASS HOLE DETAIL

Zürich Square D handle – 250mm long

Chrome plated or pearl satin finish

Order Code: **ZUR-HD-250 (Chrome)**
ZUR-PEARL-HD-250 (Pearl satin)

- Latest European design with slimline square profile with inner rounded handle for easy gripping
- Back to back pull handle; suits 8mm, 10mm and 12mm glass
- Polish or pearl satin chrome
- Nylon spacers and gaskets included to prevent glass touching metal
- Install vertically or horizontally – horizontal rail may be used as a towel rail
- Does not suit installation with modular glass door panels. Custom made glass is required

Images & drawings are not to scale

PURITY GLASS BRACKETS

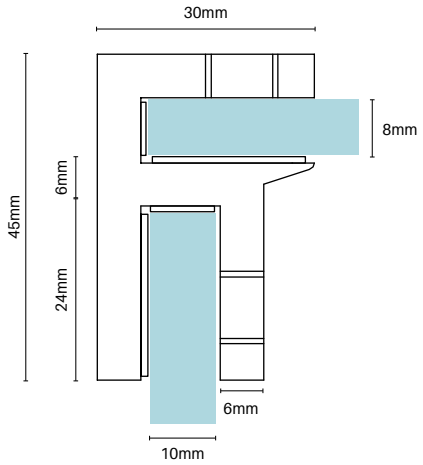

SIDE VIEW

Purity Showerscreens® glass brace bracket

SMALL – SQUARE EDGE

Chrome plated, matt black, brushed brass/gold, matt white, gunmetal & brushed nickel finishes

Order Code: **P-TGB-S (Bianco – Chrome)**
PN-TGB-S (Nero – Black)
P-ORO-TGB-S (Oro – Brushed Brass/Gold)
P-SNO-TGB-S (Sno – White)
P-GIO-TGB-S (Gio – Gunmetal)
P-NIKL-TGB-S (Nikl – Brushed Nickel)

- Brace 8mm thick glass hood to 10mm thick hinge and return panel for stability
- Removes requirement for silicone use
- 2x compression/friction screws – quick and flexible installation as no holes in glass required
- Manufactured in solid brass

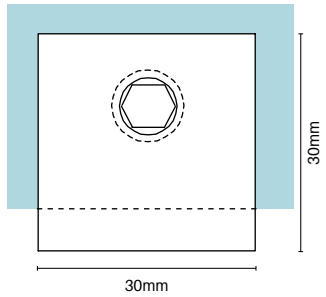

TOP VIEW

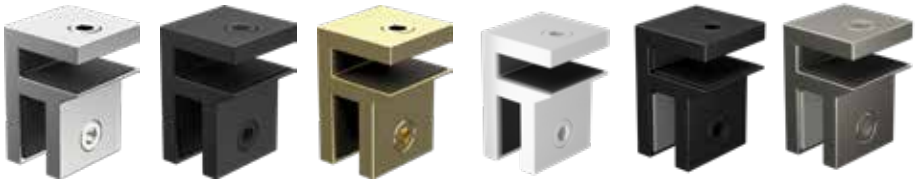
BIANCO NERO ORO SNO GIO NiKL

Eliminate the need for silicone with the friction fit glass brace panel brackets – Glass brace hood panel stabilises hinge and return panels

Place bracket ensuring glass door does not hit when swinging inwards

PURITY GLASS BRACKETS & DOOR STOPS

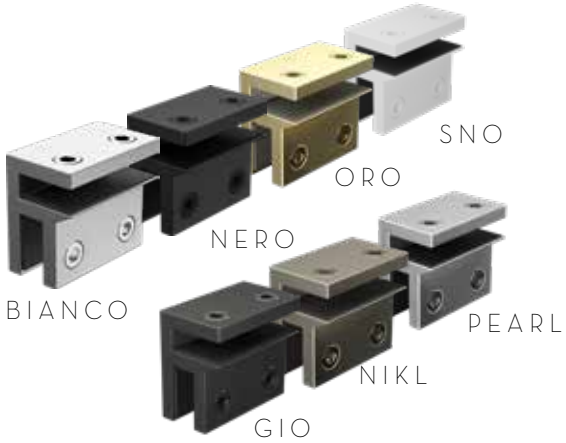

Purity Showerscreens® glass brace bracket

LARGE – SQUARE EDGE

Chrome plated, matt black, brushed brass/gold, matt white, gunmetal, brushed nickel & pearl satin finishes

Order Code: **P-TGB-L (Bianco – Chrome)**
PN-TGB-L (Nero – Black)
P-ORO-TGB-L (Oro Brushed Brass/Gold)
P-SNO-TGB-L (Sno – White)
P-GIO-TGB-L (Gio – Gunmetal)
P-NIKL-TGB-L (Nikl – Brushed Nickel)
P-PEARL-TGB-L (Pearl satin)

- Brace 8mm thick glass hood to 10mm thick hinge and return panel for stability
- Removes requirement for silicone use
- 4x compression/friction screws – quick and flexible installation as no holes in glass required
- Manufactured in solid brass
- Double screw sturdy design

Place bracket ensuring glass door does not hit when swinging inwards

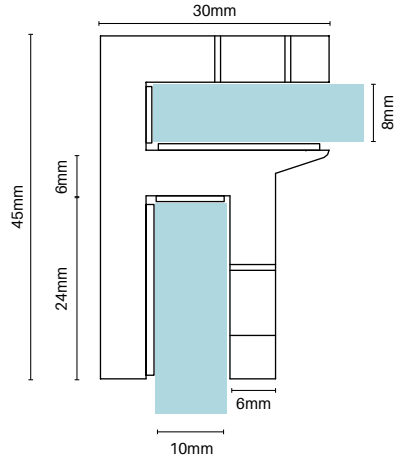

SIDE VIEW

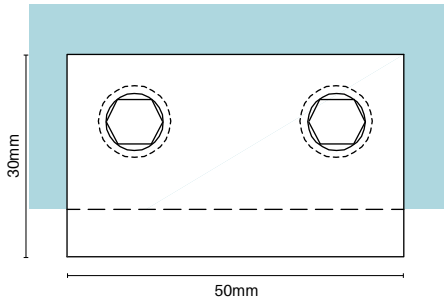

TOP VIEW

Eliminate the need for silicone with the friction fit glass brace panel brackets – Glass brace hood panel stabilises hinge and return panels

Purity Showerscreens® door stop

Polish SS304 or pearl satin finish

Order Code: **P-STOP (Bianco – Chrome)**
P-PEARL-STOP (Pearl satin)

- Slimline door stop
- Includes a non-removable rubber insert to prevent glass touching metal
- Special stainless steel leg attached to the base for added strength and to prevent the door stop from pivoting – leg is removeable if required
- Manufactured from SS304 in polish or pearl satin
- Includes fixing screw with plug

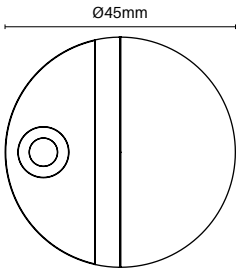

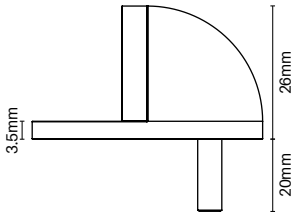

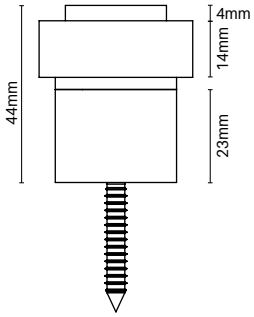

Purity Showerscreens® door bump stop

Satin finish – SS304

Order Code: **P-BUMP-S**

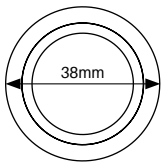

- Versatile door stopper – install into floor (vertically) or into wall (horizontally)
- 2 part design enables easy installation plus hidden fixing
- Single sturdy ST8x65mm SS304 screw
- Side rubber position can be changed to line up with glass

Images & drawings are not to scale

PURITY SUPPORT ARMS

Purity Showerscreens® adjustable arm bracket

SMALL ARM BRACKET

Chrome plated, matt black, brushed brass/gold, matt white, gunmetal, brushed nickel & pearl satin finishes

Order Code: **P-ARM-A (Bianco – Chrome)**
PN-ARM-A (Nero – Black)
P-ORO-ARM-A (Oro Brushed Brass/Gold)
P-SNO-ARM-A (Sno – White)
P-GIO-ARM-A (Gio – Gunmetal)
P-NIKL-ARM-A (Nikl – Brushed Nickel)
P-PEARL-ARM-A (Pearl Satin)

- Slimline wall to glass support arm for stabilising single glass panels
- Brace from wall to glass panel at a 45° angle to provide rigidity
- Double adjustability for easy installation; can swivel at both ends
- Unique hidden fixing wall installation for a neat finish
- Suitable for 8mm & 10mm glass
- Compression/friction screws – quick and flexible installation as no holes in glass required
- Manufactured in solid brass with SS304 tube

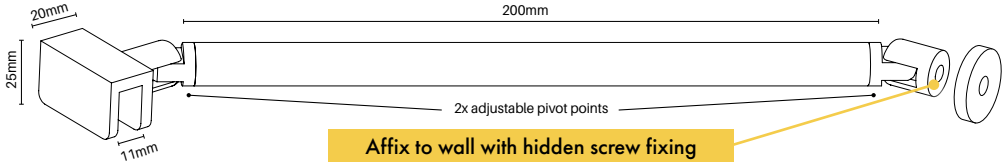

Easy angle adjustment!

Angle is easily adjustable from both ends of bracket

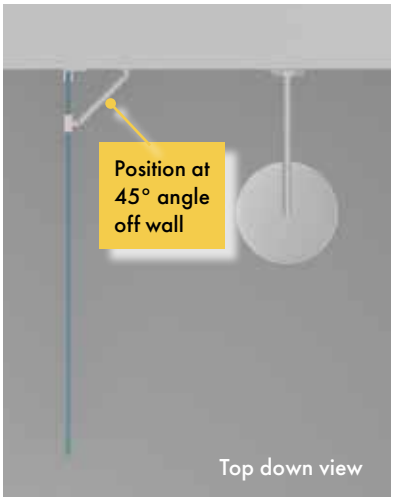

Easy width adjustment!

Simply cut to desired length and reattach fitting with grub screws

Purity Showerscreens® round horizontal support arm

Chrome plated, matt black, brushed brass/gold, matt white, gunmetal, brushed nickel & pearl satin finishes

Order Code: **P-ARM-1200 (Bianco – Chrome)**
PN-ARM-1200 (Nero – Black)
P-ORO-ARM-1200 (Oro – Brushed Brass/Gold)
P-SNO-ARM-1200 (Sno – White)
P-GIO-ARM-1200 (Gio – Gunmetal)
P-NIKL-ARM-1200 (Nikl – Brushed Nickel)
P-PEARL-ARM-1200 (Pearl satin)

- Fix horizontally from wall to top of glass panel
- Easy horizontal fixing solution for stabilising single glass panels
- Horizontal fixing – hidden fixing into wall (internal CSK screw)
- Width adjustable up to 1200mm – simply cut stainless tube to required length
- Suitable for 8mm & 10mm glass
- Friction fit to glass panel (no hole in glass required)
- Manufactured in solid brass with SS304 tube

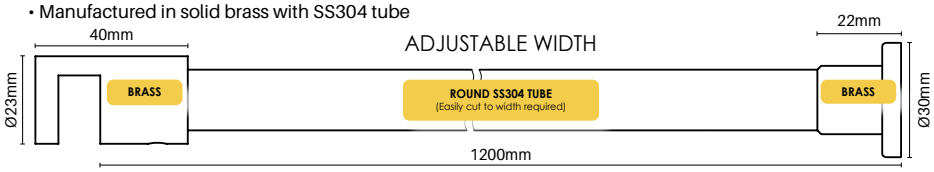

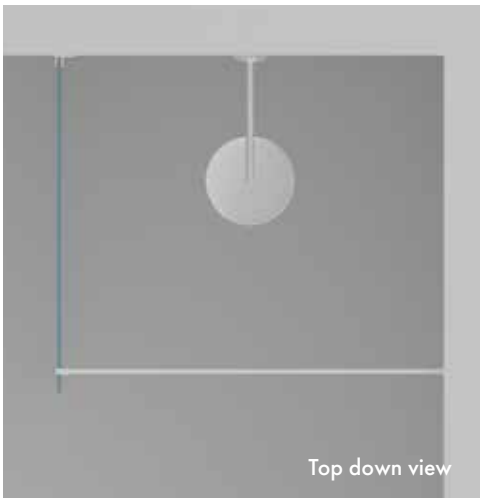

Images & drawings are not to scale

PURITY SUPPORT ARMS

Easy width adjustment!

Simply cut to desired length and reattach fitting with grub screws

Purity Showerscreens® square horizontal support arm

Brass & square SS304 tube

Order Code: **P-ARM-1200-SQ (Bianco – Chrome)**
PN-ARM-1200-SQ (Nero – Black)

- Fix horizontally from wall to top of glass panel
- Popular square design
- Easy horizontal fixing solution for stabilising single glass panels
- Horizontal fixing – hidden fixing into wall (internal CSK screw)
- Width adjustable up to 1200mm – simply cut stainless tube to required length
- Suitable for 8mm & 10mm glass
- Friction fit to glass panel (no hole in glass required)
- Manufactured in solid brass with SS304 tube

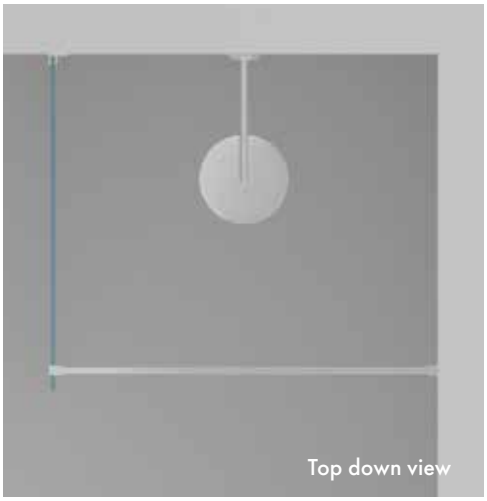

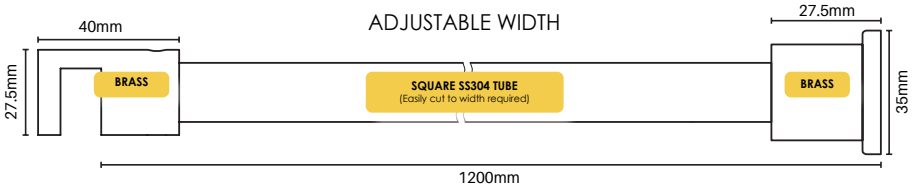

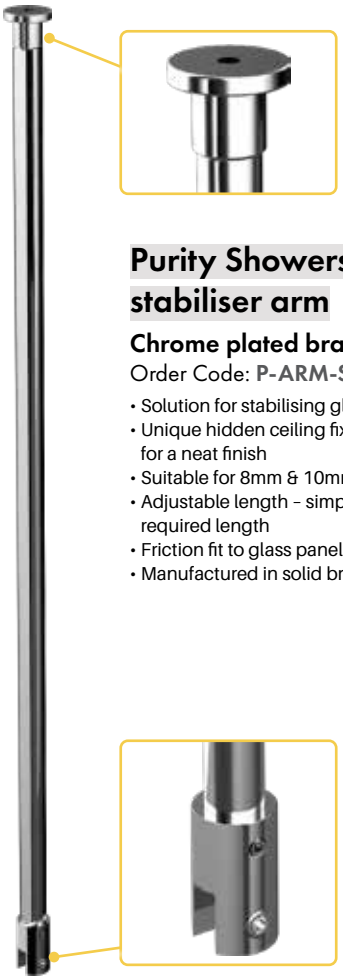

Easy height adjustment!

Simply cut to desired height and reattach fitting with grub screws

Purity Showerscreens® vertical stabiliser arm

Chrome plated brass & SS304 tube

Order Code: **P-ARM-ST (Bianco – Chrome)**

- Solution for stabilising glass panel from a ceiling
- Unique hidden ceiling fixing (internal CSK screw) for a neat finish
- Suitable for 8mm & 10mm glass
- Adjustable length – simply cut stainless tube to required length
- Friction fit to glass panel (no hole in glass required)
- Manufactured in solid brass with SS304 tube

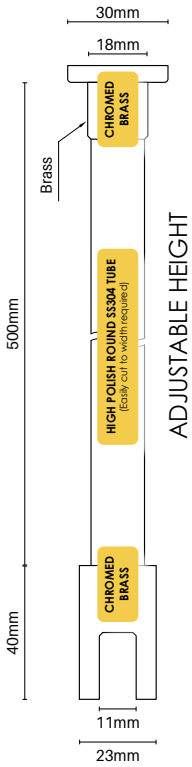

Images & drawings are not to scale

L ANGLE BRACE

Purity 'L Brace' for fixed glass panels

Suits 8mm & 10mm thick glass

Polish or satin finish

- New design brace for fixed panels
- Made from SS304 in polish or satin finish
- No holes in glass required
- Neatly sits on top of glass panel
- Fix off to wall via offset leg
- All fixings are hidden

Purity L Brace – Left

Polish or satin finish

Order Code: **P-LBRACE-P-L (Polish)**
P-LBRACE-S-L (Satin)

Purity L Brace – Right

Polish or satin finish

Order Code: **P-LBRACE-P-R (Polish)**
P-LBRACE-S-R (Satin)

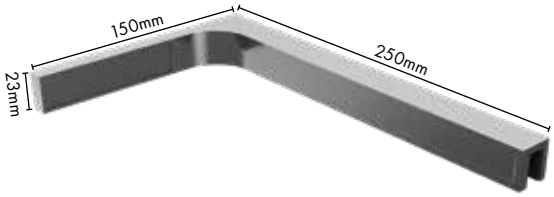

A right 'L Brace' needs to be installed on the right-hand side of the shower as you walk in, and a left 'L Brace' needs to be installed on the left-hand side of the shower as you walk in.

TOP VIEW

LEFT *'L Brace'*

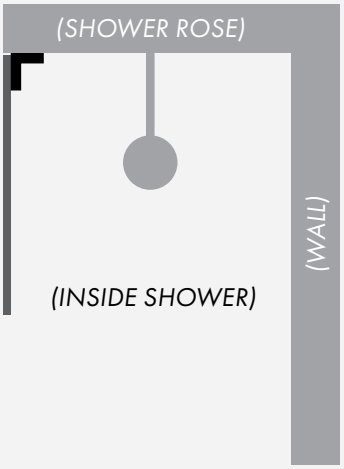

TOP VIEW

RIGHT *'L Brace'*

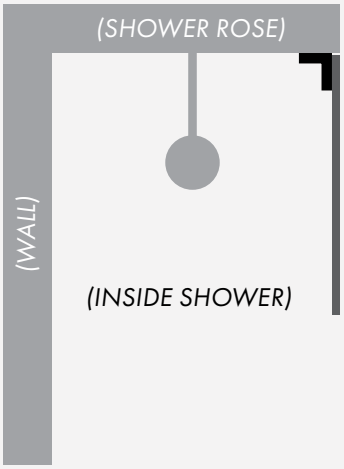

Images & drawings are not to scale

L ANGLE BRACE

HOW TO INSTALL

STEP 1

Install glass fixed panel

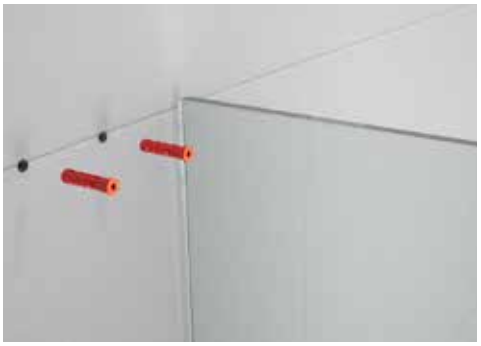

STEP 2

Position brace onto glass panel and secure using friction screws. Mark fixing position to wall and then remove brace. Pilot hole drill for fixings (and wall plugs if required)

STEP 3

Replace brace, affix to wall and then secure to glass panel with 2 x friction screws

STEP 4

Install 2 x cover plates to hide fixings

SHOWER ACCESSORIES

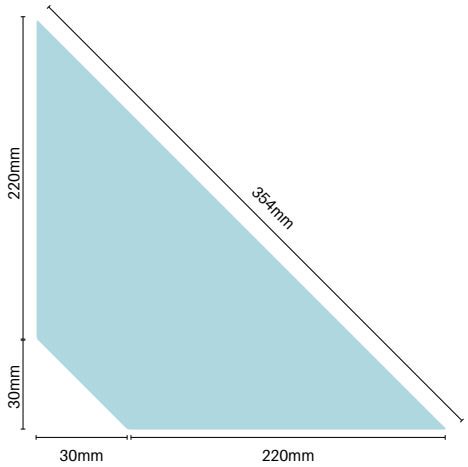

Purity Showerscreens® glass shelf

Order Code: **P-S-0250**

- Handy and stylish shelf for storage of bottles/soap in shower
- Can also be used as a brace for rigidity of glass panels

8mm thick clear toughened

1mm radius corners

Individually boxed panels

Flat polished edges

Corner protectors in packing

Thickness	Sqm	Weight
8mm	0.06	1.3kg

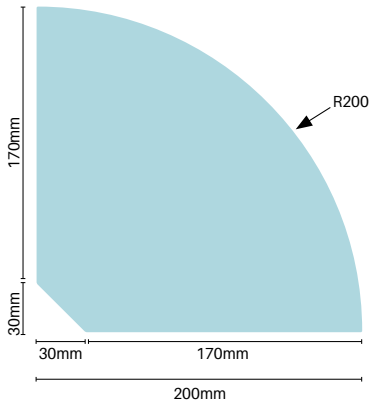

Purity Showerscreens® glass shelf with radius

Order Code: **P-S-R200**

- Handy and stylish shelf for storage of bottles/soap in shower
- Can also be used as a brace for rigidity of glass panels
- Stylish 200mm radius shape

10mm thick clear toughened

Radius 200mm

Individually boxed

Flat polished edges

Thickness	Sqm	Weight
10mm	0.04	0.8kg

Enduroshield glass treatment kit

Order Code: **ENDURO-GC-125**

- Covers up to 8sqm
- Water and oil repellent
- 1 application lasts 3+ years
- Kit includes pre-cleaner product and surface treatment
- Cuts cleaning time by up to 90%
- DIY kit commonly used & applied to glass by home owner

Kit includes:

- 125m Enduroshield Glass Home
- Surface treatment
- 250mL EnduroClean Pre-Cleaner
- Fine steel wool
- Polishing cloth
- Step by step instructions
- 3 year limited warranty

ALSO AVAILABLE IN 500ML BOTTLES

Covers up to 32sqm

Order Code: **ENDURO-GC-500**

Images & drawings are not to scale

The world's leading glass treatment now available & applied at Glass Outlet

REPELS WATER

WARRANTY

Ultimate protection

Optically clear, UV stable, chemical resistant, water and oil repellent

Reduces maintenance costs

EnduroShield keeps glass visibly cleaner for longer and reduces the frequency between cleans

Highly durable

Permanently bonds to the glass and comes with a true 10 year performance warranty*

Suits all glass ranges

From balustrading to pool fencing, high rise and domestic glazing, shower screens and insulated glass units, EnduroShield is the smart choice for glass

We will expertly coat your glass shower screen panels in our branches*

*Enduroshield is not available on Trilogy & Linea ranges.

A permanent* coating that is both water and oil repellent

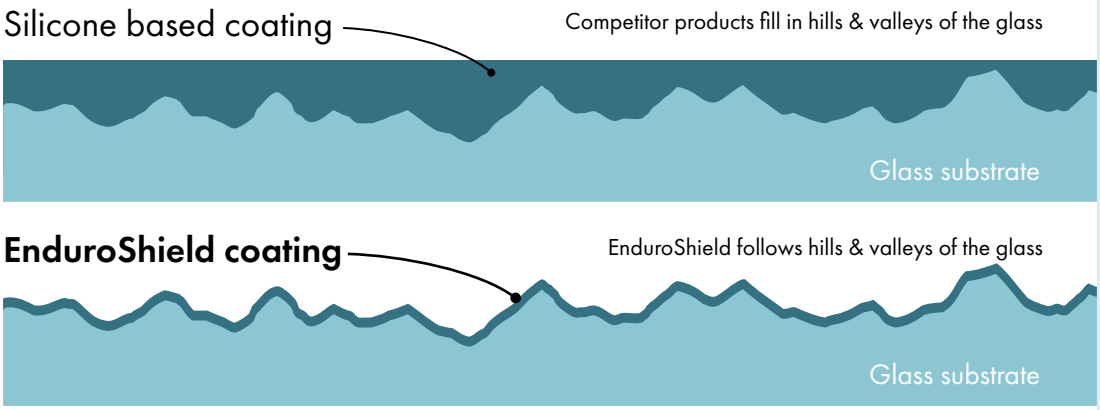

Silicone based sealers sit on top of the glass surface and can quickly wear off, leaving the surface unprotected. EnduroShield follows the hills and valleys of the glass, forming a strong, permanent* bond that does not flake or peel.

Testing and certification

*EnduroShield's performance has been independently tested by one of the leading global testing and certification houses, TÜV Rhineland in Germany for durability, easy-clean functionality, safety and quality. Testing was carried out to simulate a lifetime of 10 years on glass for both interior and exterior use, and EnduroShield passed all test.

www.tuv.com TÜVRheinland ID:0000033462

- Easy to clean
- Durability tested

*Contact us for warranty info and terms and conditions

U CHANNELS

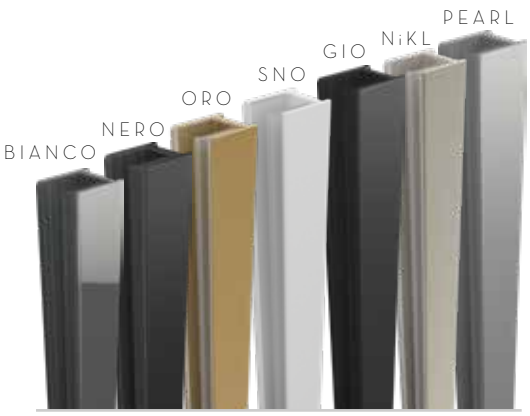

Purity Showerscreens®
Aluminium U channel

Chrome plated, matt black, brushed brass/gold, matt white, gunmetal, brushed nickel & pearl satin finishes

Order Code: **P-U-2100 (Bianco – Polish)**
PN-U-2100 (Nero – Black)
P-ORO-U-2100 (Oro Brushed Brass/Gold)
P-SNO-U-2100 (Sno – White)
P-GIO-U-2100 (Gio – Gunmetal)
P-NIKL-U-2100 (Nikl – Brushed Nickel)
P-PEARL-U-2100 (Pearl satin)

- Slimline dry glaze system – no need for silicone on glass
- Fast installation
- Suitable for 10mm clear glass
- Consider using when wall is out of square (up to 6mm)
- Internal ribs hold secure 2 part clear glazing PVC
- U channel and 2 part clear glazing PVC included
- 2100mm long – easy to cut shorter if required
- Positions glass edge 10mm from wall

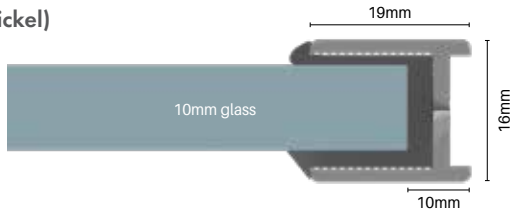

2100mm long

After cutting the U channel to size:

1 Screw the aluminium U channel to wall using counter sunk screws.
(Ensure wall plugs are used if an internal stud cannot be located)
Recommended minimum 3x screw fixings per channel evenly distributed from top to bottom of U channel
(Fixings not supplied – source own fixings depending on substrate)

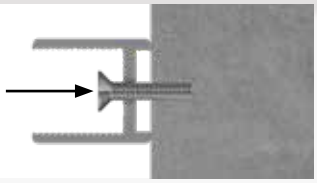

2 Run the L shaped rubber wedge inside the U channel with 'fin' facing inside the shower.
If need be, consider making a hole in PVC where screws are placed to stop PVC bulging out. Screw head must not penetrate past PVC if hole is made.

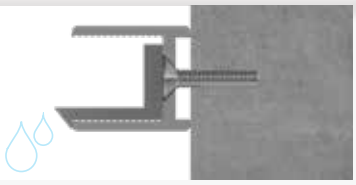

3 Insert 10mm glass panels

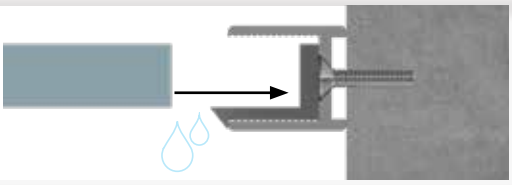

4 With a square offcut of soft pine timber & a rubber mallet, tap in the clear plastic wedge on the outside of the showerscreen, working from the bottom up.

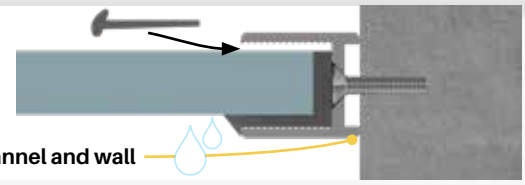

Apply silicone seal between U channel and wall

WE STOCK A RANGE OF SILICONES & ACCESSORIES
See page 52

Images & drawings are not to scale

U CHANNELS

Extended U channel – dry glaze, no silicone required

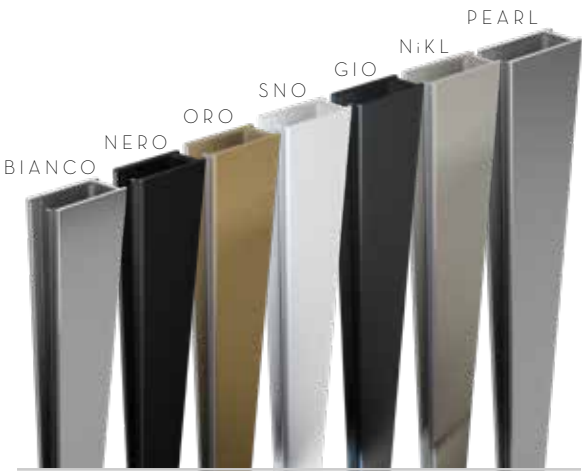

TRADE TIP: Temporarily hold the L-shape rubber in place with tape to assist with glazing the 10mm glass panel.

EXTENDED Aluminium U channel

Chrome plated, matt black, brushed brass/gold, matt white, gunmetal, brushed nickel & pearl satin finishes

Order Codes: P-U-2100-EXT (Bianco – Polish)
PN-U-2100-EXT (Nero – Black)
P-ORO-U-2100-EXT (Oro Brushed Brass/Gold)
P-SNO-U-2100-EXT (Sno – White)
P-GIO-U-2100-EXT (Gio – Gunmetal)
P-NIKL-U-2100-EXT (Nikl – Brushed Nickel)
P-PEARL-U-2100-EXT (Pearl satin)

- Extended U channel dry glaze system
- Ideal for use when walls are out of square to a large degree
- Provides extra width if required when installing glass panels
- Allows up to 15mm of width adjustment inside U channel
  *Min. distance glass edge positioned from wall: 10mm
  *Max. distance glass edge positioned from wall: 25mm

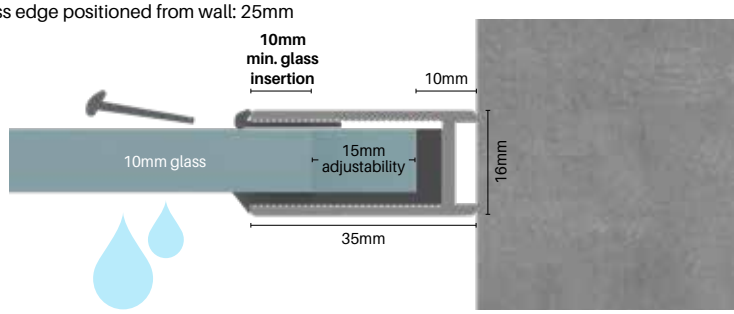

Wet glaze – silicone required

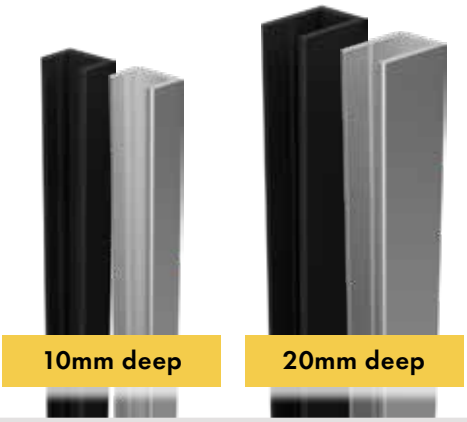

10mm anodised U channel (wet glaze)

Order Code: P-UWET-2500-10MM (2500mm)
PN-UWET-2500-10MM (2500mm)

20mm anodised U channel (wet glaze)

Order Code: P-UWET-2500-20MM (2500mm)
PN-UWET-2500-20MM (2500mm)

- Wet glaze U channel system – silicone required
- 2500mm long – adjust length by easily cutting channel
- Suits 8 & 10mm glass
- 2 finishes: Aluminium clear/satin anodise and black anodise
- 2 channel depths: 10mm or 20mm deep
- U channel can be used to secure panels to wall, ceiling or floor
- Commonly used as recess fit into tiles/wall

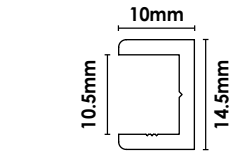

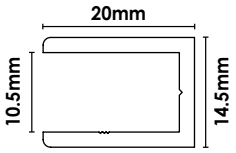

Common installation types

FIX TO WALL, CEILING OR FLOOR

Images & drawings are not to scale

WATER SEALS

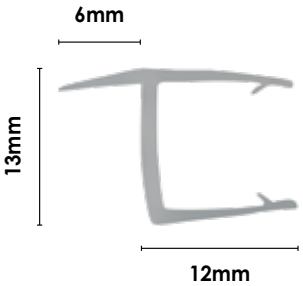

PVC hinge gap water seal

Order Code: **P-SH10-2100 (2100mm)**

- Water seal between hinge panel and door
- Suits 10mm thick glass
- U section – rigid PVC
- Single leg – 6mm flexible PVC
- Anti-mould additives included in PVC
- Simply snap onto hinge panel
- Available in 2100mm lengths

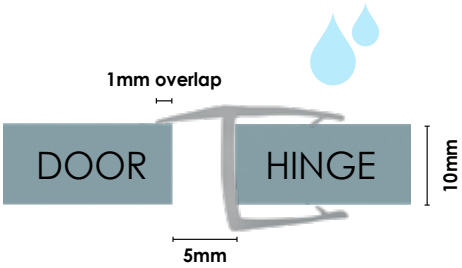

IF NO WATER BAR REQUIRED

OPTION 1

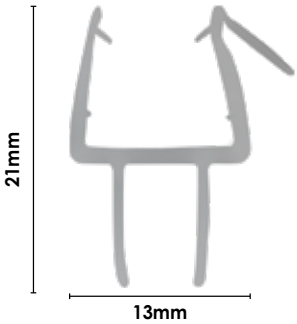

9mm PVC under door water seal

Order Code: **P-SD10-0600-09F (600mm)**
P-SD10-2100-09F (2100mm)

- Water seal under glass door with 9mm wipes
- Suits 10mm thick glass
- U section – rigid PVC
- 2x vertical leg wipes – 9mm flexible PVC
- 45 degree angle drip rail incorporated
- Anti-mould additives included in PVC
- Simply snap under glass door panel
- Available in 600mm and 2100mm lengths

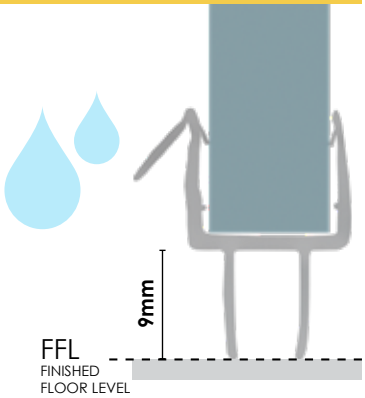

IF USING A ROUND WATER BAR AND UNDER DOOR SEAL

OPTION 2

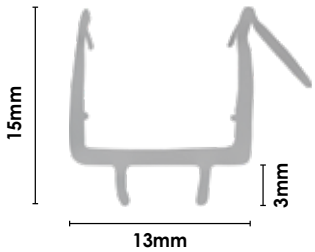

3mm PVC under door water seal

Order Code: **P-SD10-0600-03F (600mm)**
P-SD10-2100-03F (2100mm)

- Water seal under glass door with 3mm wipes
- Suits 10mm thick glass
- U section – rigid PVC
- 2x vertical leg wipes – 3mm flexible PVC
- 45 degree angle drip rail incorporated
- Anti-mould additives included in PVC
- Simply snap under glass door panel
- Available in 600mm and 2100mm lengths
- Use in conjunction with our anodised aluminium or clear acrylic water bars

Refer option 2A, 2B, 2C on following page for use with water bars

IF USING A RECTANGULAR WATER BAR AND UNDER DOOR SEAL

OPTION 3

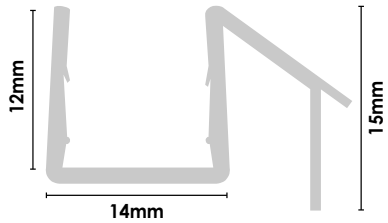

Slimline PVC under door water seal

Order Code: **P-SD10-2100-SLIM**

- Slimline water seal designed for minimal clearance under door
- Suits 10mm thick glass
- Anti-mould additives included in PVC
- Simply snap under glass door panel
- Designed to be used in conjunction with 9mm high rectangular water bar
- Available 2100mm long

Refer option 3 on p51

WATER BARS

WATER BAR OPTIONS WITH ROUND WATER BAR & 3MM FINS WATER SEAL

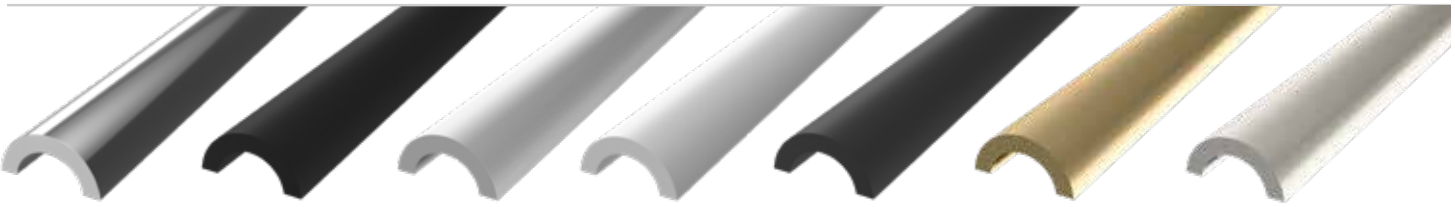

POLISH ALUMINIUM ANODISE
Compliments PURITY BIANCO & ZURICH chrome fittings

BLACK ANODISE
Compliments NERO matt black and GIO gunmetal fittings

PEARL SATIN ANODISE
Compliments ZURICH pearl satin

PEARL WHITE
Powder coated aluminium
Compliments SNO matt white fittings

GIO GUNMETAL
Compliments GIO gun metal fittings

BRUSHED BRASS/ GOLD ANODISE
Compliments ORO brushed gold fittings

BRUSHED NICKEL ANODISE
Compliments Brushed NiKL fittings

OPTION
2A

Slimline aluminium water bar

Order Code: 607mm long
P-BAR12-0607-PA (Polish aluminium)
P-BAR12-0607-B (Black anodise)
2000mm long
P-BAR12-2000-PA (Polish aluminium)
P-BAR12-2000-B (Black anodise)
P-BAR12-2000-SA (Pearl satin anodise)
P-BAR12-2000-PW (Pearl white)
P-BAR12-2000-GIO (GIO gunmetal)
P-BAR12-2000-ORO (Brushed brass/gold anodise)
P-BAR12-2000-NIKL (Brushed nickel anodise)

- Slimline aluminium water bar: 12mm wide x 6mm high
- Rebated D profile design to allow adhering to floor/base with silicone
- Easily cut to required width
- 607mm wide available in polish and black aluminium only to suit stock panel 600mm wide glass shower door
- 2000mm wide available in all finishes

*Use in conjunction with 3mm fin under door fin for maximum water seal

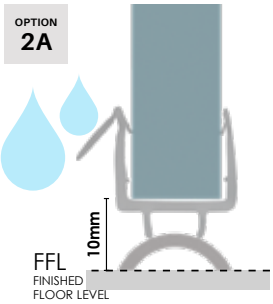

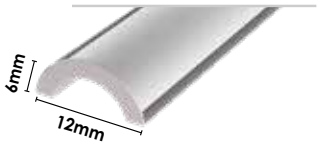

OPTION
2B

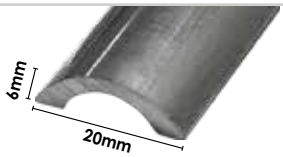

Aluminium water bar

Order Code: P-BAR-0607-PA (Polish aluminium)
P-BAR-2100-PA (Polish aluminium)

- Anodised aluminium water bar
- Polish finish
- Rebated D profile design to allow adhering to floor/base with silicone
- Available in 607mm and 2100mm lengths
- 607mm pre-cut to door opening for stock panel 600mm wide door

*Use in conjunction with 3mm fin under door fin for maximum water seal

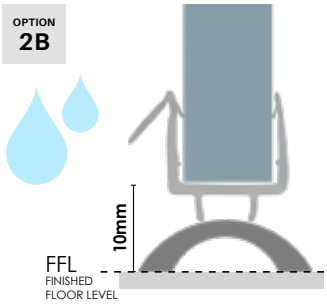

OPTION
2C

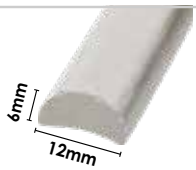

Clear acrylic water bar

Order Code: P-BAR-0607-A (600mm)
P-BAR-2100-A (2100mm)

- Clear acrylic water bar
- Rebated D profile design to allow adhering to floor/base with silicone
- Available in 607mm and 2100mm lengths
- 607mm pre-cut to door opening for stock panel 600mm wide door

*Use in conjunction with 3mm fin under door fin for maximum water seal

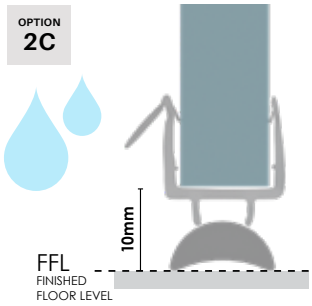

Images & drawings are not to scale

WATER BARS

WATER BAR OPTIONS WITH SQUARE WATER BAR & 3MM FINS SLIMLINE WATER SEAL

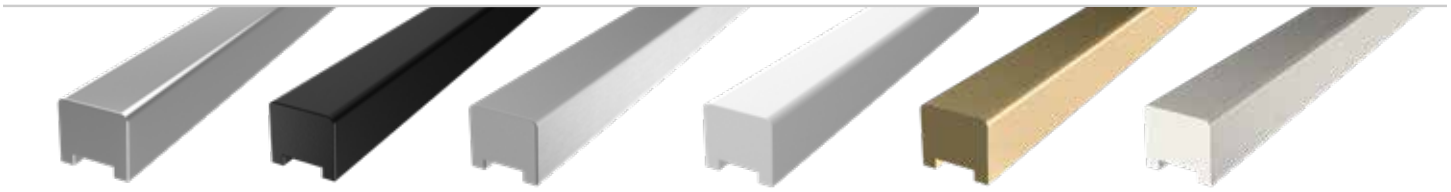

POLISH ALUMINIUM ANODISE
Compliments PURITY BIANCO & ZURICH chrome fittings

BLACK ANODISE
Compliments NERO matt black & GIO gunmetal fittings

PEARL SATIN ANODISE
Compliments ZURICH pearl satin

PEARL WHITE
Powder coated aluminium
Compliments SNO matt white fittings

BRUSHED BRASS/ GOLD ANODISE
Compliments ORO brushed gold fittings

BRUSHED NICKEL ANODISE
Compliments Brushed NiKL fittings

OPTION
3

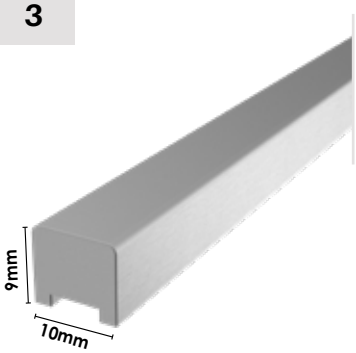

Rectangular water bar

Order Code: **P-BAR10SQ-2000-PA (Polish aluminium)**
P-BAR10SQ-2000-B (Black anodise)
P-BAR10SQ-2000-SA (Pearl satin anodise)
P-BAR10SQ-2000-ORO (Brushed brass/gold anodise)
P-BAR10SQ-2000-NIKL (Brushed nickel anodise)
P-BAR10SQ-2000-PW (White powdercoat)

- 10mm wide x 9mm high aluminium water bar
- Rebated bottom design to allow adhering to floor with silicone
- Easily cut to width required
- 2000mm wide
- Use in conjunction with slimline under door seal for maximum water seal (Code: P-SD10-2100-SLIM)

OPTION
3

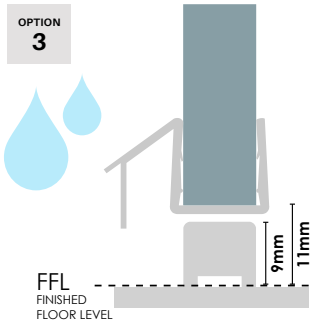

Images & drawings are not to scale

EXTRAS & ACCESSORIES

Soudal kitchen/ bathroom silicone

TRANSLUCENT – 300mL
Order Code: **SOUD-KBS-TRANS**

- Translucent finish
- High quality, neutral cure silicone
- Easy to smooth & finish
- For sealing, waterproofing and bonding applications
- Contains mould & mildew inhibitors
- Colourfast and UV resistant
- Strong adhesion to glass, tile, ceramics, aluminium, metals (including powder-coated & anodised), painted surfaces, fibreglass, stainless steel
- Use standard caulking gun

Soudal kitchen/ bathroom silicone

WHITE – 300mL
Order Code: **SOUD-KBS-W**

- White finish
- High quality, neutral cure silicone
- Easy to smooth & finish
- For sealing, waterproofing and bonding applications
- Contains mould & mildew inhibitors
- Colourfast and UV resistant
- Strong adhesion to glass, tile, ceramics, aluminium, metals (including powder-coated & anodised), painted surfaces, fibreglass, stainless steel
- Use standard caulking gun

Soudal all purpose silicone

300mL
Order Code: **SOUD-APS-B**

- Black finish
- High quality, neutral cure silicone
- Ultimate all rounder silicone (roof/ gutter, kitchen/bathroom, glass/ glazing)
- For sealing, waterproofing & bonding applications
- Strong adhesion to ceramics, glass, aluminium (including powder coated & anodised), PVC, stainless steel, zinc & galvanised coated surfaces, timber, concrete, fibreglass, laminate, painted surfaces, etc
- UV resistant with very good mould resistance (biocide with fungicidal action)
- Water potable & food safe
- Use standard caulking gun

Bostik 6S

300G – TRANSLUCENT
Order Code: **P-S-6S**

- Translucent finish
- High performance neutral cure silicone sealant
- Contains a mould and mildew inhibitor
- Seals water tight – UV and weather resistant
- Designed for use in showers, baths, sinks and laundries

Compatible substrates:

- Glass
- Ceramic tiles
- Grout
- Aluminium
- Steel
- Masonry
- Most plastics

Purity silicone spatula

MEDIUM FLEXIBILITY
Order Code: **P-SS**

- Handy tool for glazing panels with silicone
- Made from thermoplastic polyurethane – good elasticity and resistant to oils, grease & abrasion
- 1 x corner features radius (R4) for neat silicone finishing

Purity clear setting blocks

1.5mm or 3mm x 12mm x 50mm
Order Code:
P-SB-1.5MM-20PK (1.5mm thick)
P-SB-3MM-20PK (3mm thick)

- Position under glass panels to separate bottom edge of glass from floor
- Available in 1.5mm or 3mm thick

Glass gloves – pair of 2

ONE SIZE FITS ALL
NOT FOR USE WHEN WET
Order Code: **GLOVE**

Ultraloc Threadlocker 3242 compound

10ML BOTTLE
Order Code:
ULTRALOC-3242

- Medium strength removable grade threadlocking compound for metal screws, nuts and fasteners from 6mm to 20mm in diameter

Images & drawings are not to scale

EXTRAS & ACCESSORIES

Tile drill bit

Tungsten carbide bit
Order Code: **P-BIT-6MM (6mm)**
P-BIT-7MM (7mm)
P-BIT-8MM (8mm)

- Available in 6mm, 7mm or 8mm diameter
- For smooth drilling into ceramic tiles, brick, fibreglass & plastics
- Tungsten carbide bit with copper brazing
- Diamond facet spear point for precision penetration
- Bits fit into standard drills

THE PERFECT FINISH EVERYTIME.

Our new hardware swatches allow clients to select the perfect finish everytime. Compact & portable for meetings or for your showroom display.

Contact us for more info

Swatch Set

Order Code: **P-SWATCH**

- Swatch set in white carry bag
- 50mm diameter swatches of 7 x finishes: Chrome; Pearl satin; Gio gun metal; Nikl brushed nickel; Oro brushed brass/ gold; Sno white; Nero black
- Ideal for showing hardware colour finish options available

PURITY KNOB DOOR PANELS

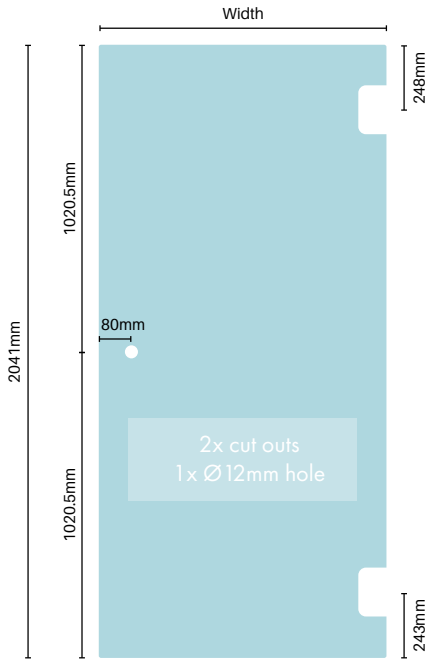

Order Code	Width	Height	Sqm	Weight
P-D-0600K	600mm	2041mm	1.22	31kg
P-D-0610K	610mm	2041mm	1.25	31kg
P-D-0620K	620mm	2041mm	1.27	32kg
P-D-0630K	630mm	2041mm	1.29	32kg
P-D-0640K	640mm	2041mm	1.31	33kg

See pages 34-35 for knob options

- 10mm thick clear toughened
- Grade "A" toughened glass
- 1mm radius corners
- Individually boxed panels
- Flat polished edges

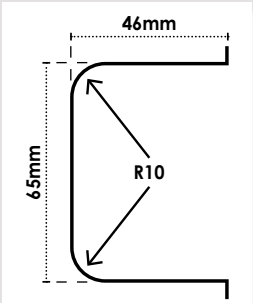

GLASS CUT OUT DETAIL

global-mark
Confidence with Commitment

PURITY HANDLE DOOR PANELS

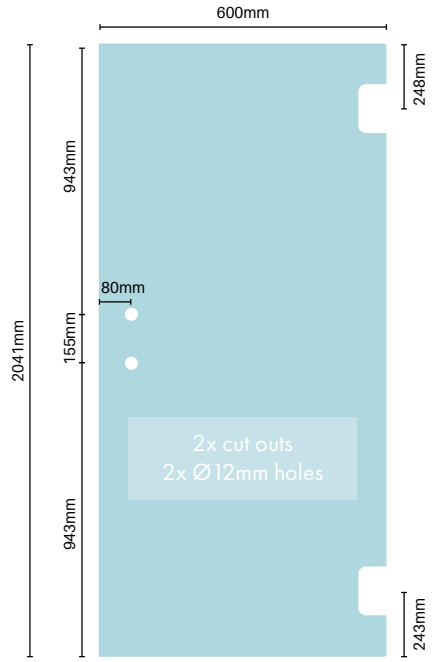

Order Code	Width	Height	Sqm	Weight
P-D-0600H	600mm	2041mm	1.22	31kg

See pages 36-37 for handle options

- 10mm thick clear toughened
- Grade "A" toughened glass
- 1mm radius corners
- Individually boxed panels
- Flat polished edges

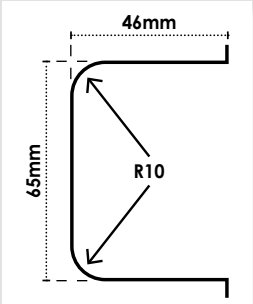

GLASS CUT OUT DETAIL

global-mark
Confidence with Commitment

PURITY HINGE PANELS

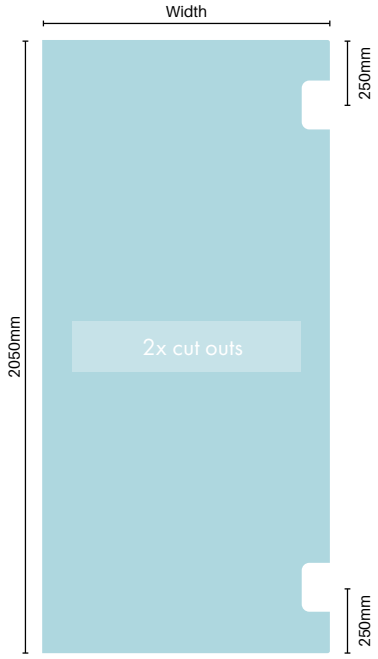

Order Code	Width	Height	Sqm	Weight
P-H-0229	229mm	2050mm	0.46	12kg
P-H-0279	279mm	2050mm	0.56	14kg
P-H-0329	329mm	2050mm	0.66	17kg
P-H-0379	379mm	2050mm	0.78	19kg
P-H-0429	429mm	2050mm	0.88	22kg
P-H-0479	479mm	2050mm	0.98	24kg
P-H-0529	529mm	2050mm	1.08	27kg
P-H-0579	579mm	2050mm	1.19	30kg

- 10mm thick clear toughened
- Grade "A" toughened glass
- 1mm radius corners
- Individually boxed panels
- Flat polished edges

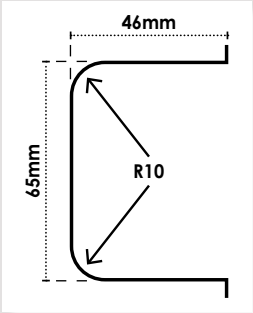

GLASS CUT OUT DETAIL

global-mark
Confidence with Commitment

PURITY RETURN/FIXED PANELS

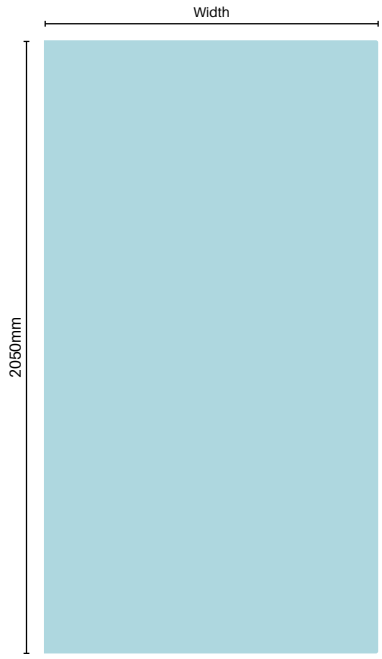

Order Code	Width	Height	Sqm	Weight
P-R-0197	197mm	2050mm	0.40	10
P-R-0297	297mm	2050mm	0.61	15
P-R-0397	397mm	2050mm	0.81	20
P-R-0497	497mm	2050mm	1.02	25
P-R-0597	597mm	2050mm	1.22	31
P-R-0697	697mm	2050mm	1.43	36
P-R-0797	797mm	2050mm	1.63	41
P-R-0847	847mm	2050mm	1.74	43
P-R-0872	872mm	2050mm	1.79	45
P-R-0897	897mm	2050mm	1.84	46
P-R-0922	922mm	2050mm	1.89	47
P-R-0947	947mm	2050mm	1.94	49
P-R-0972	972mm	2050mm	1.99	50
P-R-0997	997mm	2050mm	2.04	51
P-R-1022	1022mm	2050mm	2.10	52
P-R-1047	1047mm	2050mm	2.15	54
P-R-1097	1097mm	2050mm	2.25	56
P-R-1147	1147mm	2050mm	2.35	59
P-R-1197	1197mm	2050mm	2.45	61
P-R-1297	1297mm	2050mm	2.66	67
P-R-1397	1397mm	2050mm	2.86	72

- 10mm thick clear toughened
- Grade "A" toughened glass
- 1mm radius corners
- Individually boxed panels
- Flat polished edges

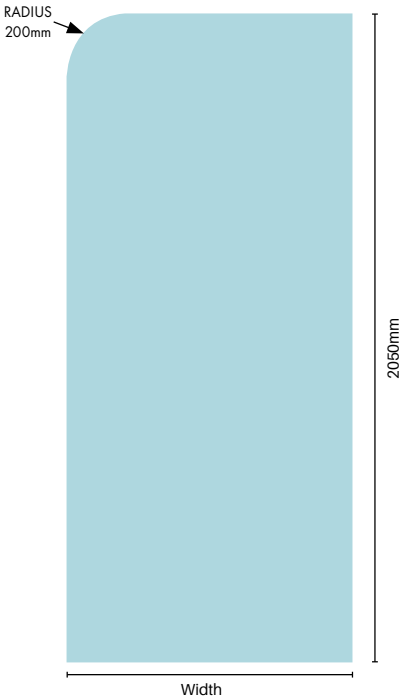

Order Code	Width	Height	Sqm	Weight
P-R-RAD-0897	897mm	2050mm	1.84	46kg
P-R-RAD-0997	997mm	2050mm	2.04	51kg
P-R-RAD-1197	1197mm	2050mm	2.45	61kg

- 10mm thick clear toughened
- Grade "A" toughened glass
- Features large radius corner (R200)
- Individually boxed panels
- Flat polished edges
- Rotate panel for left or right side fitting

Images & drawings are not to scale

ULTRACLEAR NARROW REEDED

Introducing the Future of Shower Elegance!

Dive into a blend of durability and refined aesthetics with our new 10mm toughened shower panel range. Expertly crafted with a gracefully large radius top corner and available in ultraclear narrow reeded, this new range captures the in-trend demand for large radius panels.

- 10MM TOUGHENED SAFETY GLASS
- ULTRACLEAR NARROW REEDED GLASS
- 200MM RADIUS IN TOP LEFT OR RIGHT CORNER
- FIXED PANEL
- 2050MM (H)
- AVAILABLE IN 3 WIDTHS: 897MM, 997MM, 1197MM (W)
- INDIVIDUALLY PACKAGED FOR EASY TRANSPORT & HANDLING

Order Code		Width	Height	Sqm	Weight
P-R-RAD-UCNR-0897-L	R200mm to LEFT corner	897mm	2050mm	1.84	46kg
P-R-RAD-UCNR-0897-R	R200mm to RIGHT corner	897mm	2050mm	1.84	46kg
P-R-RAD-UCNR-0997-L	R200mm to LEFT corner	997mm	2050mm	2.04	51kg
P-R-RAD-UCNR-0997-R	R200mm to RIGHT corner	997mm	2050mm	2.04	51kg
P-R-RAD-UCNR-1197-L	R200mm to LEFT corner	1197mm	2050mm	2.45	61kg
P-R-RAD-UCNR-1197-R	R200mm to RIGHT corner	1197mm	2050mm	2.45	61kg

Right screens need to be installed on the right-hand side of the shower as you walk in, and left screens need to be installed on the left-hand side of the shower as you walk in.

TOP VIEW

RIGHT *corner radius panel*

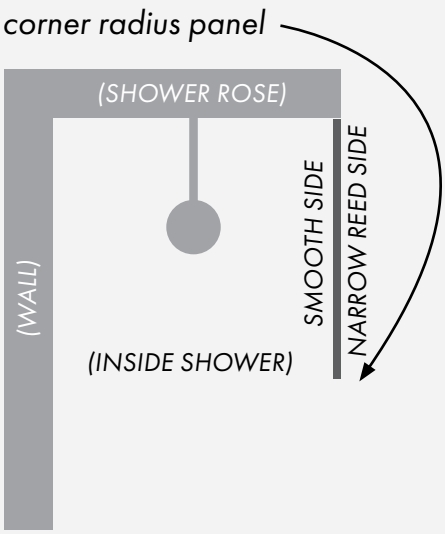

TOP VIEW

LEFT *corner radius panel*

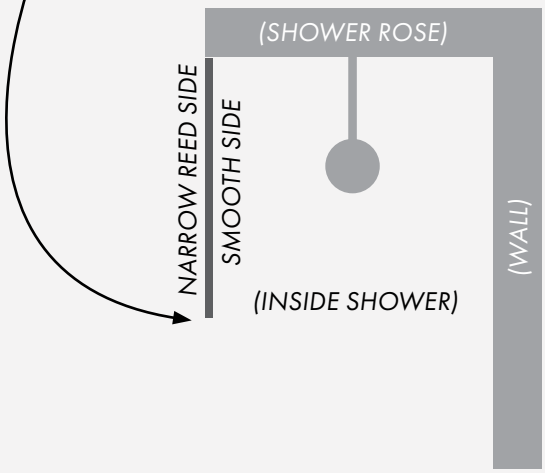

This is a **right** corner radius panel
PREMIUM ULTRACLEAR NARROW REEDED

PURITY BRACE PANELS

Provides rigidity for hinge panel supporting the shower door and return panel

- 8mm thick clear toughened
- Grade "A" toughened glass
- 1mm radius corners
- Individually boxed panels
- Flat polished edges

8mm glass brace used in a front and return frameless glass configuration.

Use in conjunction with glass brace brackets: refer P38-39.

Order Code	Width	Depth	Sqm	Weight	Suits overall install width below (refer pg 83):
P-B-0846	846mm	150mm	0.12	2.5kg	*850mm wide*
P-B-0856	856mm	150mm	0.13	2.6kg	*860mm wide*
P-B-0866	866mm	150mm	0.13	2.6kg	*870mm wide*
P-B-0876	876mm	150mm	0.13	2.6kg	*880mm wide*
P-B-0886	886mm	150mm	0.13	2.7kg	*890mm wide*
P-B-0896	896mm	150mm	0.13	2.7kg	*900mm wide*
P-B-0906	906mm	150mm	0.14	2.7kg	*910mm wide*
P-B-0916	916mm	150mm	0.14	2.7kg	*920mm wide*
P-B-0926	926mm	150mm	0.14	2.8kg	*930mm wide*
P-B-0936	936mm	150mm	0.14	2.8kg	*940mm wide*
P-B-0946	946mm	150mm	0.14	2.8kg	*950mm wide*
P-B-0956	956mm	150mm	0.14	2.9kg	*960mm wide*
P-B-0966	966mm	150mm	0.14	2.9kg	*970mm wide*
P-B-0976	976mm	150mm	0.15	2.9kg	*980mm wide*
P-B-0986	986mm	150mm	0.15	3.0kg	*990mm wide*
P-B-0996	996mm	150mm	0.15	3.0kg	*1000mm wide*
P-B-1006	1006mm	150mm	0.15	3.0kg	*1010mm wide*
P-B-1016	1016mm	150mm	0.15	3.0kg	*1020mm wide*
P-B-1026	1026mm	150mm	0.15	3.1kg	*1030mm wide*
P-B-1036	1036mm	150mm	0.15	3.1kg	*1040mm wide*
P-B-1046	1046mm	150mm	0.16	3.1kg	*1050mm wide*
P-B-1056	1056mm	150mm	0.16	3.2kg	*1060mm wide*
P-B-1066	1066mm	150mm	0.16	3.2kg	*1070mm wide*
P-B-1076	1076mm	150mm	0.16	3.2kg	*1080mm wide*
P-B-1086	1086mm	150mm	0.16	3.3kg	*1090mm wide*
P-B-1096	1096mm	150mm	0.16	3.3kg	*1100mm wide*
P-B-1106	1106mm	150mm	0.17	3.3kg	*1110mm wide*
P-B-1116	1116mm	150mm	0.17	3.3kg	*1120mm wide*
P-B-1126	1126mm	150mm	0.17	3.4kg	*1130mm wide*
P-B-1136	1136mm	150mm	0.17	3.4kg	*1140mm wide*
P-B-1146	1146mm	150mm	0.17	3.4kg	*1150mm wide*
P-B-1156	1156mm	150mm	0.17	3.5kg	*1160mm wide*
P-B-1166	1166mm	150mm	0.17	3.5kg	*1170mm wide*
P-B-1176	1176mm	150mm	0.17	3.5kg	*1180mm wide*
P-B-1186	1186mm	150mm	0.18	3.6kg	*1190mm wide*
P-B-1196	1196mm	150mm	0.18	3.6kg	*1200mm wide*
P-B-1206	1206mm	150mm	0.18	3.6kg	*1210mm wide*
P-B-1216	1216mm	150mm	0.18	3.6kg	*1220mm wide*
P-B-1226	1226mm	150mm	0.18	3.7kg	*1230mm wide*
P-B-1236	1236mm	150mm	0.18	3.7kg	*1240mm wide*

BATH SCREENS

Trilogy pivot bath screen

1500mm H x 850mm W

Bright polish finish

Order Code: **TSB-0850-P**

- 6mm clear toughened glass includes stylish rounded top corner
- Aluminium pivot against wall allows 25mm width adjustment (from 850mm to 875mm)
- Innovative design feature enables easy adjustment for out of square walls
- Left or right handing to suit bath
- Inwards and outwards swinging
- Includes drip seal to bath
- Complete kit in a box with heavy duty cardboard box packing, ideal for trade users, retail stocking or freighting

Purity Showerscreens® bath screen

1500mm H x 750mm W

Bright polish finish

Order Code: **P-BS-0750**

- 10mm clear grade "A" toughened glass
- 1mm radius corners
- Panels are individually cardboard boxed for protection
- Fixed panel provides on trend minimalist finish
- Use suitable brace with bath screen panel

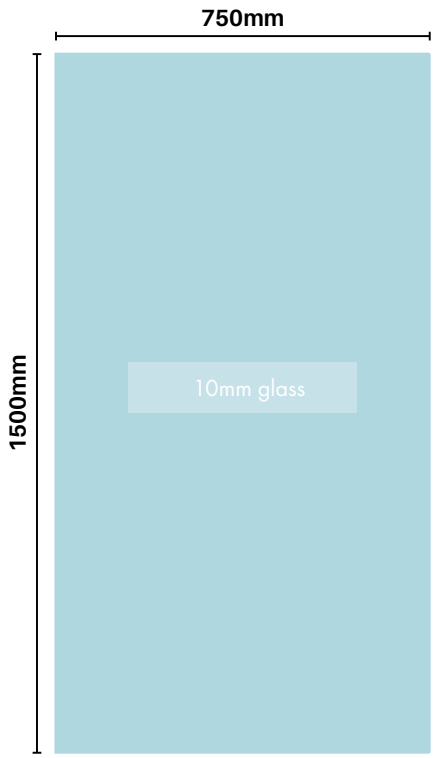

INTRODUCTION – SCREEN STYLES

Front only

Fixed Panel

Single panel affixed to wall
Minimalist and effective
Refer P64-67 for configurations

Front only

Hinge & Door Panel

Hinge panel with a door between 2 walls
Refer P68-69 for configurations

Front only

Door & Fixed Panel

Door panel plus a fixed panel between 2 walls
Refer P70-71 for configurations

Front only

Hinge & Door with Infill Panel

Hinge panel & door panel leading into a fixed panel between 2 walls
Refer P72-80 for configurations
(configuration also contemplates a return panel – refer P81)

INTRODUCTION – SCREEN STYLES

Front & return

Hinge + Door + Return

Hinge panel & door with a return panel
Very common frameless glass shower configuration
Refer P82-83 for configurations

PURITY FIXED PANEL CONFIGURATIONS

Overview

Single panel showerscreens are growing in popularity as a simple and stylish solution for bathrooms.

Select from a large range of fixed panels as detailed below. To provide extra rigidity to panels, a stabilizer arm and/or glass shelf must be installed.

- 10mm thick clear toughened
- 1mm radius corners
- Individually boxed panels
- Flat polished edges

A BRACKET OR CHANNEL GAP (MM)
B GLASS FIXED PANEL WIDTH (MM)

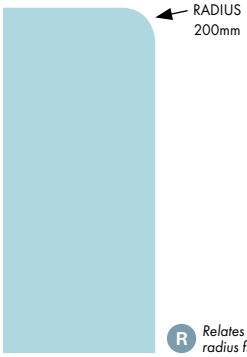

R *Relates to large radius fixed panels*

USING WALL BRACKETS

A BRACKET GAP (MM)	B GLASS FIXED PANEL WIDTH (MM)	OVERALL WIDTH (MM)	
3	197	200mm	
3	297	300mm	
3	397	400mm	
3	497	500mm	
3	597	600mm	
3	697	700mm	
3	797	800mm	
3	847	850mm	
3	872	875mm	
3	897	900mm	R
3	922	925mm	
3	947	950mm	
3	972	975mm	
3	997	1000mm	R
3	1022	1025mm	
3	1047	1050mm	
3	1097	1100mm	
3	1147	1150mm	
3	1197	1200mm	R
3	1297	1300mm	
3	1397	1400mm	

Wall bracket options

1 **Purity wall bracket**
Bianco, Nero, Oro, Sno, Gio, Pearl Satin & Brushed Nickel

2 **Purity offset wall bracket**
Bianco, Nero, Oro, Sno, Gio, Pearl Satin & Brushed Nickel

3 **Purity round wall bracket**
Bianco or Nero

PURITY FIXED PANEL CONFIGURATIONS

USING PURITY DRY GLASS U CHANNEL

A CHANNEL GAP (MM)	B GLASS FIXED PANEL WIDTH (MM)	OVERALL WIDTH (MM)	
10	197	207-210mm	
10	297	307-310mm	
10	397	407-410mm	
10	497	507-510mm	
10	597	607-610mm	
10	697	707-710mm	
10	797	807-810mm	
10	847	857-860mm	
10	872	882-885mm	
10	897	907-910mm	R
10	922	932-935mm	
10	947	957-960mm	
10	972	982-985mm	
10	997	1007-1010mm	R
10	1022	1032-1035mm	
10	1047	1057-1060mm	
10	1097	1107-1110mm	
10	1147	1157-1160mm	
10	1197	1207-1210mm	R
10	1297	1307-1310mm	
10	1397	1407-1410mm	

U channel allows up to 3mm adjustment in width inside of channel

Dry glass U Channel options

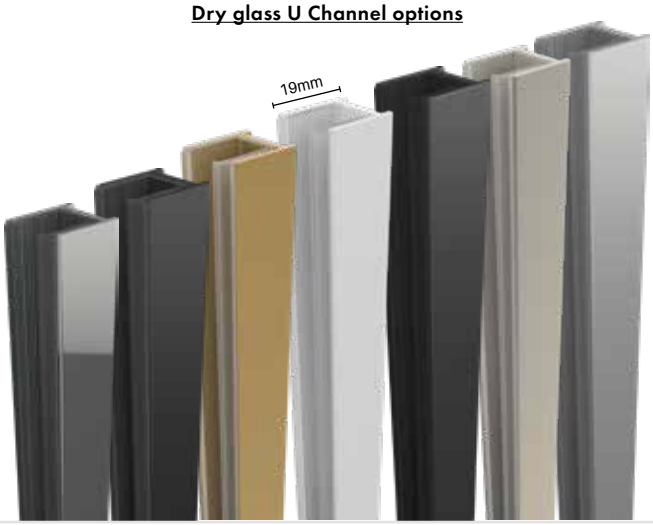

USING PURITY DRY GLASS "EXTENDED" U CHANNEL

A EXTENDED CHANNEL GAP (MM)	B GLASS FIXED PANEL WIDTH (MM)	OVERALL WIDTH (MM)	
10-25	197	207-222mm	
10-25	297	307-322mm	
10-25	397	407-422mm	
10-25	497	507-522mm	
10-25	597	607-622mm	
10-25	697	707-722mm	
10-25	797	807-822mm	
10-25	847	857-872mm	
10-25	872	882-897mm	
10-25	897	907-922mm	R
10-25	922	932-947mm	
10-25	947	957-972mm	
10-25	972	982-997mm	
10-25	997	1007-1022mm	R
10-25	1022	1032-1047mm	
10-25	1047	1057-1072mm	
10-25	1097	1107-1122mm	
10-25	1147	1157-1172mm	
10-25	1197	1207-1222mm	R
10-25	1297	1307-1322mm	
10-25	1397	1407-1422mm	

Extended U channel allows from 10mm up to 25mm gap spacing from wall.
Refer P47 for more information

Dry glass EXTENDED U Channel options

LARGE RADIUS FIXED PANEL CONFIGURATIONS

Overview

Narrow Reed Glass diffuses light perfectly, transferring light and offering you the privacy you desire.

The timeless narrow reed design gives you a nod to old-world, recreated in a modern sophisticated new design.

TRADE TIP: The ribbed surface of the glass is installed to the outside of the shower recess.

- 10mm thick toughened ultraclear narrow reeded
- Grade "A" toughened glass
- Large radius 200mm
- Individually boxed panels
- Flat polished edges

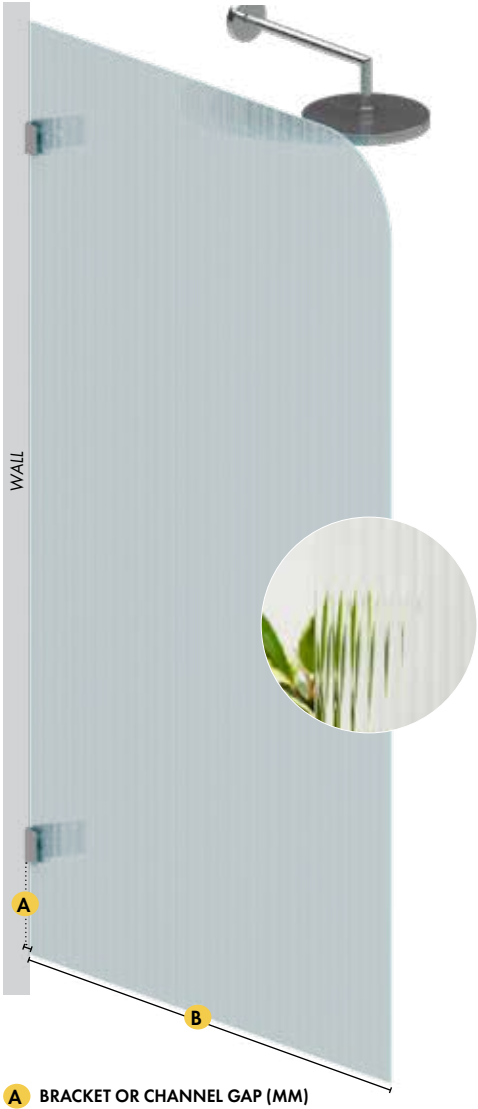

A BRACKET OR CHANNEL GAP (MM)
B GLASS FIXED PANEL WIDTH (MM)

LARGE RADIUS FIXED PANEL CONFIGURATIONS

USING WALL BRACKETS

A BRACKET GAP (MM)	B GLASS FIXED PANEL WIDTH (MM)	OVERALL WIDTH (MM)
3	897	900mm
3	997	1000mm
3	1197	1200mm

Wall bracket options

1 **Purity wall bracket**
Bianco, Nero, Oro, Sno, Gio, Pearl Satin & Brushed Nickel

2 **Purity offset wall bracket**
Bianco, Nero, Oro, Sno, Gio, Pearl Satin & Brushed Nickel

3 **Purity round wall bracket**
Bianco or Nero

USING PURITY DRY GLASS "EXTENDED" U CHANNEL

A CHANNEL GAP (MM)	B GLASS FIXED PANEL WIDTH (MM)	OVERALL WIDTH (MM)
10-25	897	907-922mm
10-25	997	1007-1022mm
10-25	1197	1207-1222mm

*** extended U channel allows from 10mm up to 25mm gap spacing from wall*
Refer P47 for more information

Dry glass EXTENDED U Channel options

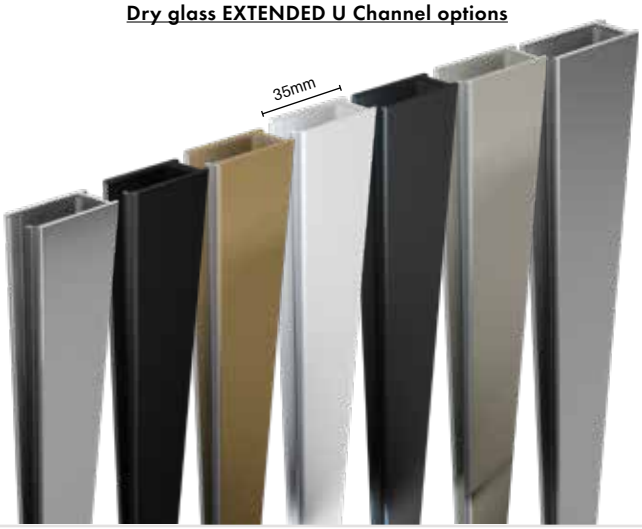

IMPORTANT: The ribbed surface of the glass is to be installed to the outside of the shower recess.

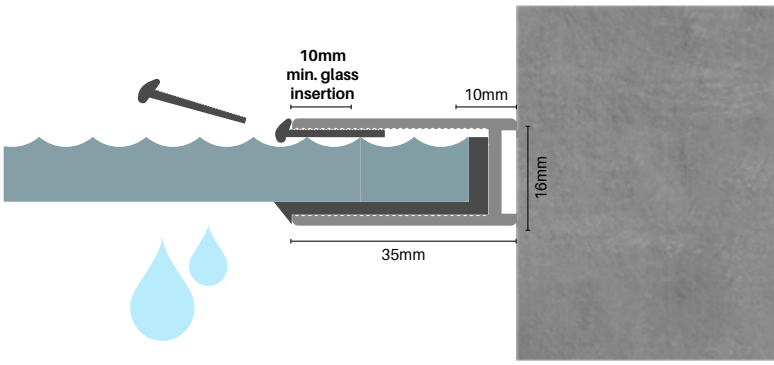

TRADE TIP: Temporarily hold the L-shape rubber in place with tape to assist with glazing the 10mm glass panel.

HINGE PANEL & DOOR CONFIGURATIONS

Overview

Enclosed shower areas with a hinge panel & door, for a secluded bathroom solution between walls.

This guide outlines the sizes available when using our range of shower doors and hinge panels.

- 10mm thick clear toughened
- 1mm radius corners
- Individually boxed panels
- Flat polished edges

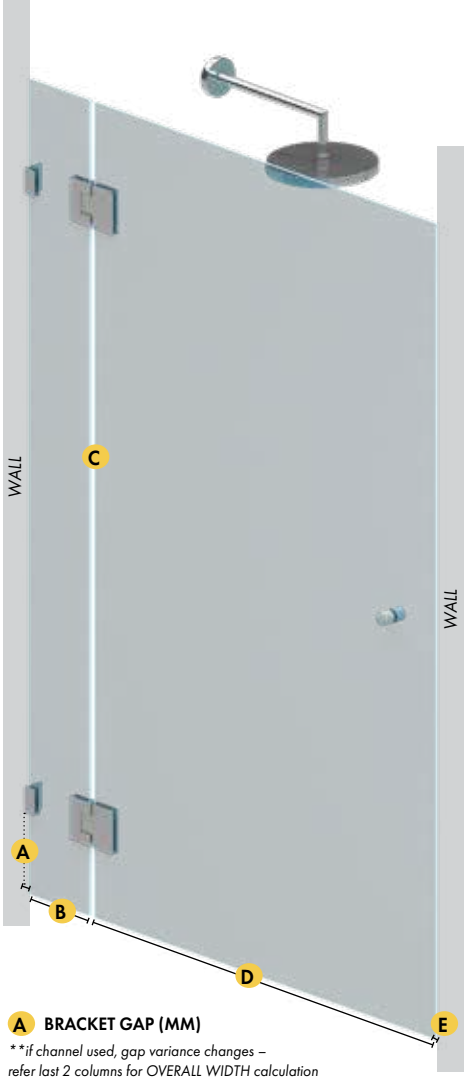

A BRACKET GAP (MM)

***if channel used, gap variance changes – refer last 2 columns for OVERALL WIDTH calculation*

B GLASS HINGE PANEL WIDTH (MM)

C DOOR HINGE GAP (MM)

D GLASS DOOR PANEL WIDTH (MM)

E LEADING EDGE GAP (MM)

HINGE PANEL & DOOR CONFIGURATIONS

USING WALL BRACKETS					USING WALL BRACKET	USING DRY GLAZE U CHANNEL	USING EXTENDED DRY GLAZE U CHANNEL
A BRACKET GAP (MM)	B GLASS HINGE PANEL WIDTH (MM)	C DOOR HINGE GAP (MM)	D GLASS DOOR PANEL WIDTH (MM)	E LEADING EDGE GAP (MM)	OVERALL WIDTH (MM)	*If using dry glaze U channel instead of wall brackets, OVERALL WIDTH becomes*	*If using "EXTENDED" dry glaze U channel instead of wall brackets, OVERALL WIDTH range becomes*
3	229	5	600	3	840mm	847-850mm	847-862mm
3	229	5	610	3	850mm	857-860mm	857-872mm
3	229	5	620	3	860mm	867-870mm	867-882mm
3	229	5	630	3	870mm	877-880mm	877-892mm
3	229	5	640	3	880mm	887-890mm	887-902mm
3	279	5	600	3	890mm	897-900mm	897-912mm
3	279	5	610	3	900mm	907-910mm	907-922mm
3	279	5	620	3	910mm	917-920mm	917-932mm
3	279	5	630	3	920mm	927-930mm	927-942mm
3	279	5	640	3	930mm	937-940mm	937-952mm
3	329	5	600	3	940mm	947-950mm	947-962mm
3	329	5	610	3	950mm	957-960mm	957-972mm
3	329	5	620	3	960mm	967-970mm	967-982mm
3	329	5	630	3	970mm	977-980mm	977-992mm
3	329	5	640	3	980mm	987-990mm	987-1002mm
3	379	5	600	3	990mm	997-1000mm	997-1012mm
3	379	5	610	3	1000mm	1007-1010mm	1007-1022mm
3	379	5	620	3	1010mm	1017-1020mm	1017-1032mm
3	379	5	630	3	1020mm	1027-1030mm	1027-1042mm
3	379	5	640	3	1030mm	1037-1040mm	1037-1052mm
3	429	5	600	3	1040mm	1047-1050mm	1047-1062mm
3	429	5	610	3	1050mm	1057-1060mm	1057-1072mm
3	429	5	620	3	1060mm	1067-1070mm	1067-1082mm
3	429	5	630	3	1070mm	1077-1080mm	1077-1092mm
3	429	5	640	3	1080mm	1087-1090mm	1087-1102mm
3	479	5	600	3	1090mm	1097-1100mm	1097-1112mm
3	479	5	610	3	1100mm	1107-1110mm	1107-1122mm
3	479	5	620	3	1110mm	1117-1120mm	1117-1132mm
3	479	5	630	3	1120mm	1127-1130mm	1127-1142mm
3	479	5	640	3	1130mm	1137-1140mm	1137-1152mm
3	529	5	600	3	1140mm	1147-1150mm	1147-1162mm
3	529	5	610	3	1150mm	1157-1160mm	1157-1172mm
3	529	5	620	3	1160mm	1167-1170mm	1167-1182mm
3	529	5	630	3	1170mm	1177-1180mm	1177-1192mm
3	529	5	640	3	1180mm	1187-1190mm	1187-1202mm
3	579	5	600	3	1190mm	1197-1200mm	1197-1212mm
3	579	5	610	3	1200mm	1207-1210mm	1207-1222mm
3	579	5	620	3	1210mm	1217-1220mm	1217-1232mm
3	579	5	630	3	1220mm	1227-1230mm	1227-1242mm
3	579	5	640	3	1230mm	1237-1240mm	1237-1252mm

Wall bracket options

1 **Purity wall bracket**
Bianco, Nero, Oro, Sno, Gio, Pearl Satin & Brushed Nickel

2 **Purity offset wall bracket**
Bianco, Nero, Oro, Sno, Gio, Pearl Satin & Brushed Nickel

3 **Purity round wall bracket**
Bianco or Nero

Dry glass U Channel options

Dry glass extended U Channel options

DOOR & FIXED PANEL CONFIGURATIONS

Overview

A fixed panel with a hinged door is ideal for wider inline shower openings.

This guide outlines the sizes available when using our range of fixed panels and shower doors.

- 10mm thick clear toughened
- 1mm radius corners
- Individually boxed panels
- Flat polished edges

A BRACKET GAP (MM)
***if channel used, gap variance changes – refer last 2 columns for OVERALL WIDTH calculation*

B GLASS FIXED PANEL WIDTH (MM)

C GAP (MM)

D GLASS DOOR PANEL WIDTH (MM)

E HINGE GAP (MM)

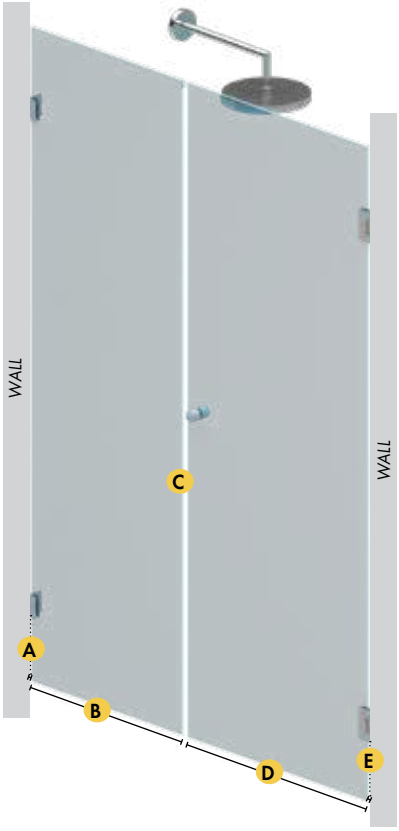

A BRACKET GAP (MM)	B GLASS FIXED PANEL WIDTH (MM)	C GAP (MM)	D GLASS DOOR PANEL WIDTH (MM)	E HINGE GAP (MM)	USING WALL BRACKET: OVERALL WIDTH (MM)	USING DRY GLAZE U CHANNEL: *If using dry glaze U channel instead of wall brackets, OVERALL WIDTH becomes*	USING EXTENDED DRY GLAZE U CHANNEL: *If using "EXTENDED" dry glaze U channel instead of wall brackets, OVERALL WIDTH range becomes*
3	197	3	600	9	812mm	819-822mm	819-834mm
3	197	3	610	9	822mm	829-832mm	829-844mm
3	197	3	620	9	832mm	839-842mm	839-854mm
3	197	3	630	9	842mm	849-852mm	849-864mm
3	197	3	640	9	852mm	859-862mm	859-874mm
3	297	3	600	9	912mm	919-922mm	919-934mm
3	297	3	610	9	922mm	929-932mm	929-944mm
3	297	3	620	9	932mm	939-942mm	939-954mm
3	297	3	630	9	942mm	949-952mm	949-964mm
3	297	3	640	9	952mm	959-962mm	959-974mm
3	397	3	600	9	1012mm	1019-1022mm	1019-1034mm
3	397	3	610	9	1022mm	1029-1032mm	1029-1044mm
3	397	3	620	9	1032mm	1039-1042mm	1039-1054mm
3	397	3	630	9	1042mm	1049-1052mm	1049-1064mm
3	397	3	640	9	1052mm	1059-1062mm	1059-1074mm
3	497	3	600	9	1112mm	1119-1122mm	1119-1134mm
3	497	3	610	9	1122mm	1129-1132mm	1129-1144mm
3	497	3	620	9	1132mm	1139-1142mm	1139-1154mm
3	497	3	630	9	1142mm	1149-1152mm	1149-1164mm
3	497	3	640	9	1152mm	1159-1162mm	1159-1174mm
3	597	3	600	9	1212mm	1219-1222mm	1219-1234mm
3	597	3	610	9	1222mm	1229-1232mm	1229-1244mm
3	597	3	620	9	1232mm	1239-1242mm	1239-1254mm
3	597	3	630	9	1242mm	1249-1252mm	1249-1264mm
3	597	3	640	9	1252mm	1259-1262mm	1259-1274mm
3	697	3	600	9	1312mm	1319-1322mm	1319-1334mm
3	697	3	610	9	1322mm	1329-1332mm	1329-1344mm
3	697	3	620	9	1332mm	1339-1342mm	1339-1354mm
3	697	3	630	9	1342mm	1349-1352mm	1349-1364mm
3	697	3	640	9	1352mm	1359-1362mm	1359-1374mm
3	797	3	600	9	1412mm	1419-1422mm	1419-1434mm
3	797	3	610	9	1422mm	1429-1432mm	1429-1444mm
3	797	3	620	9	1432mm	1439-1442mm	1439-1454mm
3	797	3	630	9	1442mm	1449-1452mm	1449-1464mm

A	B	C	D	E			
3	797	3	640	9	1452mm	1459-1462mm	1459-1474mm
3	847	3	600	9	1462mm	1469-1472mm	1469-1484mm
3	847	3	610	9	1472mm	1479-1482mm	1479-1494mm
3	847	3	620	9	1482mm	1489-1492mm	1489-1504mm
3	847	3	630	9	1492mm	1499-1502mm	1499-1514mm
3	847	3	640	9	1502mm	1509-1512mm	1509-1524mm
3	872	3	600	9	1487mm	1494-1497mm	1494-1509mm
3	872	3	610	9	1497mm	1504-1507mm	1504-1519mm
3	872	3	620	9	1507mm	1514-1517mm	1514-1529mm
3	872	3	630	9	1517mm	1524-1527mm	1524-1539mm
3	872	3	640	9	1527mm	1534-1537mm	1534-1549mm
3	897	3	600	9	1512mm	1519-1522mm	1519-1534mm
3	897	3	610	9	1522mm	1529-1532mm	1529-1544mm
3	897	3	620	9	1532mm	1539-1542mm	1539-1554mm
3	897	3	630	9	1542mm	1549-1552mm	1549-1564mm
3	897	3	640	9	1552mm	1559-1562mm	1559-1574mm
3	922	3	600	9	1537mm	1544-1547mm	1544-1559mm
3	922	3	610	9	1547mm	1554-1557mm	1554-1569mm
3	922	3	620	9	1557mm	1564-1567mm	1564-1579mm
3	922	3	630	9	1567mm	1574-1577mm	1574-1589mm
3	922	3	640	9	1577mm	1584-1587mm	1584-1599mm
3	947	3	600	9	1562mm	1569-1572mm	1569-1584mm
3	947	3	610	9	1572mm	1579-1582mm	1579-1594mm
3	947	3	620	9	1582mm	1589-1592mm	1589-1604mm
3	947	3	630	9	1592mm	1599-1602mm	1599-1614mm
3	947	3	640	9	1602mm	1609-1612mm	1609-1624mm
3	972	3	600	9	1587mm	1594-1597mm	1594-1609mm
3	972	3	610	9	1597mm	1604-1607mm	1604-1619mm
3	972	3	620	9	1607mm	1614-1617mm	1614-1629mm
3	972	3	630	9	1617mm	1624-1627mm	1624-1639mm
3	972	3	640	9	1627mm	1634-1637mm	1634-1649mm
3	997	3	600	9	1612mm	1619-1622mm	1619-1634mm
3	997	3	610	9	1622mm	1629-1632mm	1629-1644mm
3	997	3	620	9	1632mm	1639-1642mm	1639-1654mm
3	997	3	630	9	1642mm	1649-1652mm	1649-1664mm
3	997	3	640	9	1652mm	1659-1662mm	1659-1674mm
3	1022	3	600	9	1637mm	1644-1647mm	1644-1659mm
3	1022	3	610	9	1647mm	1654-1657mm	1654-1669mm
3	1022	3	620	9	1657mm	1664-1667mm	1664-1679mm
3	1022	3	630	9	1667mm	1674-1677mm	1674-1689mm
3	1022	3	640	9	1677mm	1684-1687mm	1684-1699mm
3	1047	3	600	9	1662mm	1669-1672mm	1669-1684mm
3	1047	3	610	9	1672mm	1679-1682mm	1679-1694mm
3	1047	3	620	9	1682mm	1689-1692mm	1689-1704mm
3	1047	3	630	9	1692mm	1699-1702mm	1699-1714mm
3	1047	3	640	9	1702mm	1709-1712mm	1709-1724mm
3	1097	3	600	9	1712mm	1719-1722mm	1719-1734mm
3	1097	3	610	9	1722mm	1729-1732mm	1729-1744mm
3	1097	3	620	9	1732mm	1739-1742mm	1739-1754mm
3	1097	3	630	9	1742mm	1749-1752mm	1749-1764mm
3	1097	3	640	9	1752mm	1759-1762mm	1759-1774mm
3	1147	3	600	9	1762mm	1769-1772mm	1769-1784mm
3	1147	3	610	9	1772mm	1779-1782mm	1779-1794mm
3	1147	3	620	9	1782mm	1789-1792mm	1789-1804mm
3	1147	3	630	9	1792mm	1799-1802mm	1799-1814mm
3	1147	3	640	9	1802mm	1809-1812mm	1809-1824mm
3	1197	3	600	9	1812mm	1819-1822mm	1819-1834mm
3	1197	3	610	9	1822mm	1829-1832mm	1829-1844mm
3	1197	3	620	9	1832mm	1839-1842mm	1839-1854mm
3	1197	3	630	9	1842mm	1849-1852mm	1849-1864mm
3	1197	3	640	9	1852mm	1859-1862mm	1859-1874mm
3	1297	3	600	9	1912mm	1919-1922mm	1919-1934mm
3	1297	3	610	9	1922mm	1929-1932mm	1929-1944mm
3	1297	3	620	9	1932mm	1939-1942mm	1939-1954mm
3	1297	3	630	9	1942mm	1949-1952mm	1949-1964mm
3	1297	3	640	9	1952mm	1959-1962mm	1959-1974mm
3	1397	3	600	9	2012mm	2019-2022mm	2019-2034mm
3	1397	3	610	9	2022mm	2029-2032mm	2029-2044mm
3	1397	3	620	9	2032mm	2039-2042mm	2039-2054mm
3	1397	3	630	9	2042mm	2049-2052mm	2049-2064mm
3	1397	3	640	9	2052mm	2059-2062mm	2059-2074mm

HINGE & DOOR PANEL WITH INFILL PANEL

Overview

Purity hinged door with adjacent infill panel

An INFILL/FIXED panel next to a door is another popular configuration.

This guide outlines sizes available for in inline configuration featuring a hinge panel with door and infill/fixed panel.

- 10mm thick clear toughened
- 1mm radius corners
- Individually boxed panels
- Flat polished edges

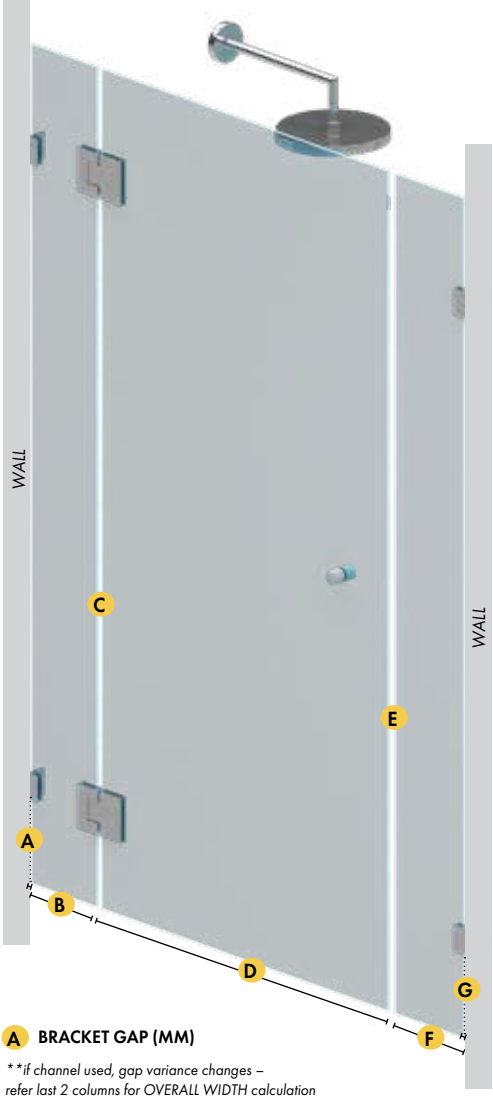

A BRACKET GAP (MM)

***if channel used, gap variance changes – refer last 2 columns for OVERALL WIDTH calculation*

B GLASS HINGE PANEL WIDTH (MM)

C HINGE GAP (MM)

D GLASS DOOR PANEL WIDTH (MM)

E GAP (MM)

F GLASS FIXED PANEL WIDTH (MM)

G BRACKET GAP (MM)

HINGE & DOOR PANEL WITH INFILL PANEL

B GLASS HINGE PANEL WIDTH (MM)	C HINGE GAP (MM)	D GLASS DOOR PANEL WIDTH (MM)	E GAP (MM)	F GLASS FIXED PANEL WIDTH (MM)	A & G – OPTION 1 OVERALL WIDTH (MM) *Using wall bracket both sides*	A & G – OPTION 2 OVERALL WIDTH (MM) *Using U Channel both sides*	A & G – OPTION 3 OVERALL WIDTH (MM) *Using "Extended" U Channel both sides*
229	5	600	3	197	1040mm	1054-1057mm	1054-1074mm
229	5	610	3	197	1050mm	1064-1067mm	1064-1084mm
229	5	620	3	197	1060mm	1074-1077mm	1074-1094mm
229	5	630	3	197	1070mm	1084-1087mm	1084-1104mm
229	5	640	3	197	1080mm	1094-1097mm	1094-1114mm
279	5	600	3	197	1090mm	1104-1107mm	1104-1124mm
279	5	610	3	197	1100mm	1114-1117mm	1114-1134mm
279	5	620	3	197	1110mm	1124-1127mm	1124-1144mm
279	5	630	3	197	1120mm	1134-1137mm	1134-1154mm
279	5	640	3	197	1130mm	1144-1147mm	1144-1164mm
329	5	600	3	197	1140mm	1154-1157mm	1154-1174mm
329	5	610	3	197	1150mm	1164-1167mm	1164-1184mm
329	5	620	3	197	1160mm	1174-1177mm	1174-1194mm
329	5	630	3	197	1170mm	1184-1187mm	1184-1204mm
329	5	640	3	197	1180mm	1194-1197mm	1194-1214mm
379	5	600	3	197	1190mm	1204-1207mm	1204-1224mm
379	5	610	3	197	1200mm	1214-1217mm	1214-1234mm
379	5	620	3	197	1210mm	1224-1227mm	1224-1244mm
379	5	630	3	197	1220mm	1234-1237mm	1234-1254mm
379	5	640	3	197	1230mm	1244-1247mm	1244-1264mm
429	5	600	3	197	1240mm	1254-1257mm	1254-1274mm
429	5	610	3	197	1250mm	1264-1267mm	1264-1284mm
429	5	620	3	197	1260mm	1274-1277mm	1274-1294mm
429	5	630	3	197	1270mm	1284-1287mm	1284-1304mm
429	5	640	3	197	1280mm	1294-1297mm	1294-1314mm
479	5	600	3	197	1290mm	1304-1307mm	1304-1324mm
479	5	610	3	197	1300mm	1314-1317mm	1314-1334mm
479	5	620	3	197	1310mm	1324-1327mm	1324-1344mm
479	5	630	3	197	1320mm	1334-1337mm	1334-1354mm
479	5	640	3	197	1330mm	1344-1347mm	1344-1364mm
529	5	600	3	197	1340mm	1354-1357mm	1354-1374mm
529	5	610	3	197	1350mm	1364-1367mm	1364-1384mm
529	5	620	3	197	1360mm	1374-1377mm	1374-1394mm
529	5	630	3	197	1370mm	1384-1387mm	1384-1404mm
529	5	640	3	197	1380mm	1394-1397mm	1394-1414mm
579	5	600	3	197	1390mm	1404-1407mm	1404-1424mm
579	5	610	3	197	1400mm	1414-1417mm	1414-1434mm
579	5	620	3	197	1410mm	1424-1427mm	1424-1444mm
579	5	630	3	197	1420mm	1434-1437mm	1434-1454mm
579	5	640	3	197	1430mm	1444-1447mm	1444-1464mm

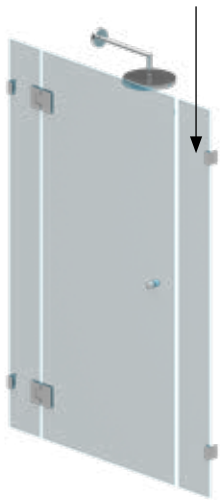

*Featuring **197mm** fixed panel*

CONTINUED ON FOLLOWING PAGE...

HINGE & DOOR PANEL WITH INFILL PANEL

B GLASS HINGE PANEL WIDTH (MM)	C HINGE GAP (MM)	D GLASS DOOR PANEL WIDTH (MM)	E GAP (MM)	F GLASS FIXED PANEL WIDTH (MM)	A & G – OPTION 1 OVERALL WIDTH (MM) *Using wall bracket both sides*	A & G – OPTION 2 OVERALL WIDTH (MM) *Using U Channel both sides*	A & G – OPTION 3 OVERALL WIDTH (MM) *Using "Extended" U Channel both sides*
229	5	600	3	297	1140mm	1154-1157mm	1154-1174mm
229	5	610	3	297	1150mm	1164-1167mm	1164-1184mm
229	5	620	3	297	1160mm	1174-1177mm	1174-1194mm
229	5	630	3	297	1170mm	1184-1187mm	1184-1204mm
229	5	640	3	297	1180mm	1194-1197mm	1194-1214mm
279	5	600	3	297	1190mm	1204-1207mm	1204-1224mm
279	5	610	3	297	1200mm	1214-1217mm	1214-1234mm
279	5	620	3	297	1210mm	1224-1227mm	1224-1244mm
279	5	630	3	297	1220mm	1234-1237mm	1234-1254mm
279	5	640	3	297	1230mm	1244-1247mm	1244-1264mm
329	5	600	3	297	1240mm	1254-1257mm	1254-1274mm
329	5	610	3	297	1250mm	1264-1267mm	1264-1284mm
329	5	620	3	297	1260mm	1274-1277mm	1274-1294mm
329	5	630	3	297	1270mm	1284-1287mm	1284-1304mm
329	5	640	3	297	1280mm	1294-1297mm	1294-1314mm
379	5	600	3	297	1290mm	1304-1307mm	1304-1324mm
379	5	610	3	297	1300mm	1314-1317mm	1314-1334mm
379	5	620	3	297	1310mm	1324-1327mm	1324-1344mm
379	5	630	3	297	1320mm	1334-1337mm	1334-1354mm
379	5	640	3	297	1330mm	1344-1347mm	1344-1364mm
429	5	600	3	297	1340mm	1354-1357mm	1354-1374mm
429	5	610	3	297	1350mm	1364-1367mm	1364-1384mm
429	5	620	3	297	1360mm	1374-1377mm	1374-1394mm
429	5	630	3	297	1370mm	1384-1387mm	1384-1404mm
429	5	640	3	297	1380mm	1394-1397mm	1394-1414mm
479	5	600	3	297	1390mm	1404-1407mm	1404-1424mm
479	5	610	3	297	1400mm	1414-1417mm	1414-1434mm
479	5	620	3	297	1410mm	1424-1427mm	1424-1444mm
479	5	630	3	297	1420mm	1434-1437mm	1434-1454mm
479	5	640	3	297	1430mm	1444-1447mm	1444-1464mm
529	5	600	3	297	1440mm	1454-1457mm	1454-1474mm
529	5	610	3	297	1450mm	1464-1467mm	1464-1484mm
529	5	620	3	297	1460mm	1474-1477mm	1474-1494mm
529	5	630	3	297	1470mm	1484-1487mm	1484-1504mm
529	5	640	3	297	1480mm	1494-1497mm	1494-1514mm
579	5	600	3	297	1490mm	1504-1507mm	1504-1524mm
579	5	610	3	297	1500mm	1514-1517mm	1514-1534mm
579	5	620	3	297	1510mm	1524-1527mm	1524-1544mm
579	5	630	3	297	1520mm	1534-1537mm	1534-1554mm
579	5	640	3	297	1530mm	1544-1547mm	1544-1564mm

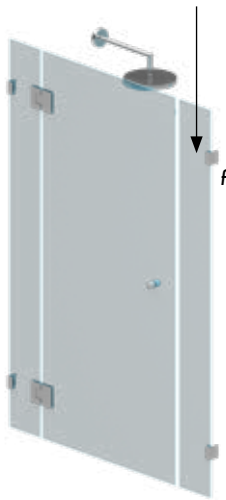

*Featuring **297mm** fixed panel*

CONTINUED ON FOLLOWING PAGE...

HINGE & DOOR PANEL WITH INFILL PANEL

B GLASS HINGE PANEL WIDTH (MM)	C HINGE GAP (MM)	D GLASS DOOR PANEL WIDTH (MM)	E GAP (MM)	F GLASS FIXED PANEL WIDTH (MM)	A & G – OPTION 1 OVERALL WIDTH (MM) *Using wall bracket both sides*	A & G – OPTION 2 OVERALL WIDTH (MM) *Using U Channel both sides*	A & G – OPTION 3 OVERALL WIDTH (MM) *Using "Extended" U Channel both sides*
229	5	600	3	397	1240mm	1254-1257mm	1254-1274mm
229	5	610	3	397	1250mm	1264-1267mm	1264-1284mm
229	5	620	3	397	1260mm	1274-1277mm	1274-1294mm
229	5	630	3	397	1270mm	1284-1287mm	1284-1304mm
229	5	640	3	397	1280mm	1294-1297mm	1294-1314mm
279	5	600	3	397	1290mm	1304-1307mm	1304-1324mm
279	5	610	3	397	1300mm	1314-1317mm	1314-1334mm
279	5	620	3	397	1310mm	1324-1327mm	1324-1344mm
279	5	630	3	397	1320mm	1334-1337mm	1334-1354mm
279	5	640	3	397	1330mm	1344-1347mm	1344-1364mm
329	5	600	3	397	1340mm	1354-1357mm	1354-1374mm
329	5	610	3	397	1350mm	1364-1367mm	1364-1384mm
329	5	620	3	397	1360mm	1374-1377mm	1374-1394mm
329	5	630	3	397	1370mm	1384-1387mm	1384-1404mm
329	5	640	3	397	1380mm	1394-1397mm	1394-1414mm
379	5	600	3	397	1390mm	1404-1407mm	1404-1424mm
379	5	610	3	397	1400mm	1414-1417mm	1414-1434mm
379	5	620	3	397	1410mm	1424-1427mm	1424-1444mm
379	5	630	3	397	1420mm	1434-1437mm	1434-1454mm
379	5	640	3	397	1430mm	1444-1447mm	1444-1464mm
429	5	600	3	397	1440mm	1454-1457mm	1454-1474mm
429	5	610	3	397	1450mm	1464-1467mm	1464-1484mm
429	5	620	3	397	1460mm	1474-1477mm	1474-1494mm
429	5	630	3	397	1470mm	1484-1487mm	1484-1504mm
429	5	640	3	397	1480mm	1494-1497mm	1494-1514mm
479	5	600	3	397	1490mm	1504-1507mm	1504-1524mm
479	5	610	3	397	1500mm	1514-1517mm	1514-1534mm
479	5	620	3	397	1510mm	1524-1527mm	1524-1544mm
479	5	630	3	397	1520mm	1534-1537mm	1534-1554mm
479	5	640	3	397	1530mm	1544-1547mm	1544-1564mm
529	5	600	3	397	1540mm	1554-1557mm	1554-1574mm
529	5	610	3	397	1550mm	1564-1567mm	1564-1584mm
529	5	620	3	397	1560mm	1574-1577mm	1574-1594mm
529	5	630	3	397	1570mm	1584-1587mm	1584-1604mm
529	5	640	3	397	1580mm	1594-1597mm	1594-1614mm
579	5	600	3	397	1590mm	1604-1607mm	1604-1624mm
579	5	610	3	397	1600mm	1614-1617mm	1614-1634mm
579	5	620	3	397	1610mm	1624-1627mm	1624-1644mm
579	5	630	3	397	1620mm	1634-1637mm	1634-1654mm
579	5	640	3	397	1630mm	1644-1647mm	1644-1664mm

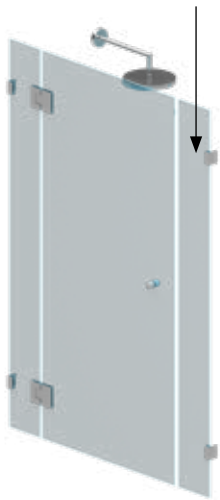

Featuring ***397mm*** *fixed panel*

CONTINUED ON FOLLOWING PAGE...

HINGE & DOOR PANEL WITH INFILL PANEL

B GLASS HINGE PANEL WIDTH (MM)	C HINGE GAP (MM)	D GLASS DOOR PANEL WIDTH (MM)	E GAP (MM)	F GLASS FIXED PANEL WIDTH (MM)	A & G – OPTION 1 OVERALL WIDTH (MM) *Using wall bracket both sides*	A & G – OPTION 2 OVERALL WIDTH (MM) *Using U Channel both sides*	A & G – OPTION 3 OVERALL WIDTH (MM) *Using "Extended" U Channel both sides*
229	5	600	3	497	1340mm	1354-1357mm	1354-1374mm
229	5	610	3	497	1350mm	1364-1367mm	1364-1384mm
229	5	620	3	497	1360mm	1374-1377mm	1374-1394mm
229	5	630	3	497	1370mm	1384-1387mm	1384-1404mm
229	5	640	3	497	1380mm	1394-1397mm	1394-1414mm
279	5	600	3	497	1390mm	1404-1407mm	1404-1424mm
279	5	610	3	497	1400mm	1414-1417mm	1414-1434mm
279	5	620	3	497	1410mm	1424-1427mm	1424-1444mm
279	5	630	3	497	1420mm	1434-1437mm	1434-1454mm
279	5	640	3	497	1430mm	1444-1447mm	1444-1464mm
329	5	600	3	497	1440mm	1454-1457mm	1454-1474mm
329	5	610	3	497	1450mm	1464-1467mm	1464-1484mm
329	5	620	3	497	1460mm	1474-1477mm	1474-1494mm
329	5	630	3	497	1470mm	1484-1487mm	1484-1504mm
329	5	640	3	497	1480mm	1494-1497mm	1494-1514mm
379	5	600	3	497	1490mm	1504-1507mm	1504-1524mm
379	5	610	3	497	1500mm	1514-1517mm	1514-1534mm
379	5	620	3	497	1510mm	1524-1527mm	1524-1544mm
379	5	630	3	497	1520mm	1534-1537mm	1534-1554mm
379	5	640	3	497	1530mm	1544-1547mm	1544-1564mm
429	5	600	3	497	1540mm	1554-1557mm	1554-1574mm
429	5	610	3	497	1550mm	1564-1567mm	1564-1584mm
429	5	620	3	497	1560mm	1574-1577mm	1574-1594mm
429	5	630	3	497	1570mm	1584-1587mm	1584-1604mm
429	5	640	3	497	1580mm	1594-1597mm	1594-1614mm
479	5	600	3	497	1590mm	1604-1607mm	1604-1624mm
479	5	610	3	497	1600mm	1614-1617mm	1614-1634mm
479	5	620	3	497	1610mm	1624-1627mm	1624-1644mm
479	5	630	3	497	1620mm	1634-1637mm	1634-1654mm
479	5	640	3	497	1630mm	1644-1647mm	1644-1664mm
529	5	600	3	497	1640mm	1654-1657mm	1654-1674mm
529	5	610	3	497	1650mm	1664-1667mm	1664-1684mm
529	5	620	3	497	1660mm	1674-1677mm	1674-1694mm
529	5	630	3	497	1670mm	1684-1687mm	1684-1704mm
529	5	640	3	497	1680mm	1694-1697mm	1694-1714mm
579	5	600	3	497	1690mm	1704-1707mm	1704-1724mm
579	5	610	3	497	1700mm	1714-1717mm	1714-1734mm
579	5	620	3	497	1710mm	1724-1727mm	1724-1744mm
579	5	630	3	497	1720mm	1734-1737mm	1734-1754mm
579	5	640	3	497	1730mm	1744-1747mm	1744-1764mm

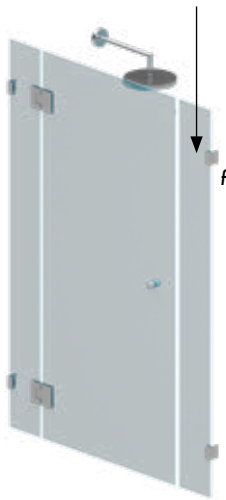

*Featuring **497mm** fixed panel*

CONTINUED ON FOLLOWING PAGE...

HINGE & DOOR PANEL WITH INFILL PANEL

B GLASS HINGE PANEL WIDTH (MM)	C HINGE GAP (MM)	D GLASS DOOR PANEL WIDTH (MM)	E GAP (MM)	F GLASS FIXED PANEL WIDTH (MM)	A & G – OPTION 1 OVERALL WIDTH (MM) *Using wall bracket both sides*	A & G – OPTION 2 OVERALL WIDTH (MM) *Using U Channel both sides*	A & G – OPTION 3 OVERALL WIDTH (MM) *Using "Extended" U Channel both sides*
229	5	600	3	597	1440mm	1454-1457mm	1454-1474mm
229	5	610	3	597	1450mm	1464-1467mm	1464-1484mm
229	5	620	3	597	1460mm	1474-1477mm	1474-1494mm
229	5	630	3	597	1470mm	1484-1487mm	1484-1504mm
229	5	640	3	597	1480mm	1494-1497mm	1494-1514mm
279	5	600	3	597	1490mm	1504-1507mm	1504-1524mm
279	5	610	3	597	1500mm	1514-1517mm	1514-1534mm
279	5	620	3	597	1510mm	1524-1527mm	1524-1544mm
279	5	630	3	597	1520mm	1534-1537mm	1534-1554mm
279	5	640	3	597	1530mm	1544-1547mm	1544-1564mm
329	5	600	3	597	1540mm	1554-1557mm	1554-1574mm
329	5	610	3	597	1550mm	1564-1567mm	1564-1584mm
329	5	620	3	597	1560mm	1574-1577mm	1574-1594mm
329	5	630	3	597	1570mm	1584-1587mm	1584-1604mm
329	5	640	3	597	1580mm	1594-1597mm	1594-1614mm
379	5	600	3	597	1590mm	1604-1607mm	1604-1624mm
379	5	610	3	597	1600mm	1614-1617mm	1614-1634mm
379	5	620	3	597	1610mm	1624-1627mm	1624-1644mm
379	5	630	3	597	1620mm	1634-1637mm	1634-1654mm
379	5	640	3	597	1630mm	1644-1647mm	1644-1664mm
429	5	600	3	597	1640mm	1654-1657mm	1654-1674mm
429	5	610	3	597	1650mm	1664-1667mm	1664-1684mm
429	5	620	3	597	1660mm	1674-1677mm	1674-1694mm
429	5	630	3	597	1670mm	1684-1687mm	1684-1704mm
429	5	640	3	597	1680mm	1694-1697mm	1694-1714mm
479	5	600	3	597	1690mm	1704-1707mm	1704-1724mm
479	5	610	3	597	1700mm	1714-1717mm	1714-1734mm
479	5	620	3	597	1710mm	1724-1727mm	1724-1744mm
479	5	630	3	597	1720mm	1734-1737mm	1734-1754mm
479	5	640	3	597	1730mm	1744-1747mm	1744-1764mm
529	5	600	3	597	1740mm	1754-1757mm	1754-1774mm
529	5	610	3	597	1750mm	1764-1767mm	1764-1784mm
529	5	620	3	597	1760mm	1774-1777mm	1774-1794mm
529	5	630	3	597	1770mm	1784-1787mm	1784-1804mm
529	5	640	3	597	1780mm	1794-1797mm	1794-1814mm
579	5	600	3	597	1790mm	1804-1807mm	1804-1824mm
579	5	610	3	597	1800mm	1814-1817mm	1814-1834mm
579	5	620	3	597	1810mm	1824-1827mm	1824-1844mm
579	5	630	3	597	1820mm	1834-1837mm	1834-1854mm
579	5	640	3	597	1830mm	1844-1847mm	1844-1864mm

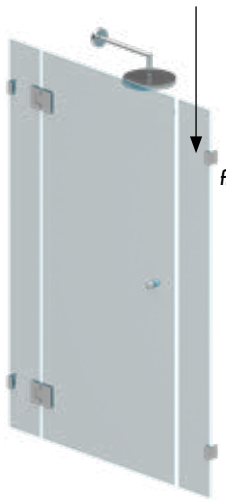

*Featuring **597mm** fixed panel*

CONTINUED ON FOLLOWING PAGE...

HINGE & DOOR PANEL WITH INFILL PANEL

B GLASS HINGE PANEL WIDTH (MM)	C HINGE GAP (MM)	D GLASS DOOR PANEL WIDTH (MM)	E GAP (MM)	F GLASS FIXED PANEL WIDTH (MM)	A & G – OPTION 1 OVERALL WIDTH (MM) *Using wall bracket both sides*	A & G – OPTION 2 OVERALL WIDTH (MM) *Using U Channel both sides*	A & G – OPTION 3 OVERALL WIDTH (MM) *Using "Extended" U Channel both sides*
229	5	600	3	697	1540mm	1554-1557mm	1554-1574mm
229	5	610	3	697	1550mm	1564-1567mm	1564-1584mm
229	5	620	3	697	1560mm	1574-1577mm	1574-1594mm
229	5	630	3	697	1570mm	1584-1587mm	1584-1604mm
229	5	640	3	697	1580mm	1594-1597mm	1594-1614mm
279	5	600	3	697	1590mm	1604-1607mm	1604-1624mm
279	5	610	3	697	1600mm	1614-1617mm	1614-1634mm
279	5	620	3	697	1610mm	1624-1627mm	1624-1644mm
279	5	630	3	697	1620mm	1634-1637mm	1634-1654mm
279	5	640	3	697	1630mm	1644-1647mm	1644-1664mm
329	5	600	3	697	1640mm	1654-1657mm	1654-1674mm
329	5	610	3	697	1650mm	1664-1667mm	1664-1684mm
329	5	620	3	697	1660mm	1674-1677mm	1674-1694mm
329	5	630	3	697	1670mm	1684-1687mm	1684-1704mm
329	5	640	3	697	1680mm	1694-1697mm	1694-1714mm
379	5	600	3	697	1690mm	1704-1707mm	1704-1724mm
379	5	610	3	697	1700mm	1714-1717mm	1714-1734mm
379	5	620	3	697	1710mm	1724-1727mm	1724-1744mm
379	5	630	3	697	1720mm	1734-1737mm	1734-1754mm
379	5	640	3	697	1730mm	1744-1747mm	1744-1764mm
429	5	600	3	697	1740mm	1754-1757mm	1754-1774mm
429	5	610	3	697	1750mm	1764-1767mm	1764-1784mm
429	5	620	3	697	1760mm	1774-1777mm	1774-1794mm
429	5	630	3	697	1770mm	1784-1787mm	1784-1804mm
429	5	640	3	697	1780mm	1794-1797mm	1794-1814mm
479	5	600	3	697	1790mm	1804-1807mm	1804-1824mm
479	5	610	3	697	1800mm	1814-1817mm	1814-1834mm
479	5	620	3	697	1810mm	1824-1827mm	1824-1844mm
479	5	630	3	697	1820mm	1834-1837mm	1834-1854mm
479	5	640	3	697	1830mm	1844-1847mm	1844-1864mm
529	5	600	3	697	1840mm	1854-1857mm	1854-1874mm
529	5	610	3	697	1850mm	1864-1867mm	1864-1884mm
529	5	620	3	697	1860mm	1874-1877mm	1874-1894mm
529	5	630	3	697	1870mm	1884-1887mm	1884-1904mm
529	5	640	3	697	1880mm	1894-1897mm	1894-1914mm
579	5	600	3	697	1890mm	1904-1907mm	1904-1924mm
579	5	610	3	697	1900mm	1914-1917mm	1914-1934mm
579	5	620	3	697	1910mm	1924-1927mm	1924-1944mm
579	5	630	3	697	1920mm	1934-1937mm	1934-1954mm
579	5	640	3	697	1930mm	1944-1947mm	1944-1964mm

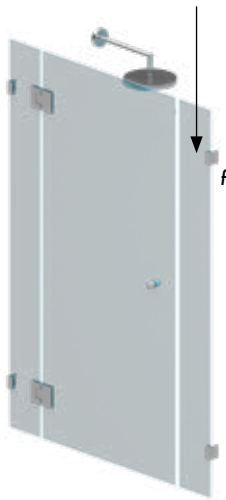

Featuring ***697mm*** *fixed panel*

CONTINUED ON FOLLOWING PAGE...

HINGE & DOOR PANEL WITH INFILL PANEL

B GLASS HINGE PANEL WIDTH (MM)	C HINGE GAP (MM)	D GLASS DOOR PANEL WIDTH (MM)	E GAP (MM)	F GLASS FIXED PANEL WIDTH (MM)	A & G – OPTION 1 OVERALL WIDTH (MM) *Using wall bracket both sides*	A & G – OPTION 2 OVERALL WIDTH (MM) *Using U Channel both sides*	A & G – OPTION 3 OVERALL WIDTH (MM) *Using "Extended" U Channel both sides*
229	5	600	3	797	1640mm	1654-1657mm	1654-1674mm
229	5	610	3	797	1650mm	1664-1667mm	1664-1684mm
229	5	620	3	797	1660mm	1674-1677mm	1674-1694mm
229	5	630	3	797	1670mm	1684-1687mm	1684-1704mm
229	5	640	3	797	1680mm	1694-1697mm	1694-1714mm
279	5	600	3	797	1690mm	1704-1707mm	1704-1724mm
279	5	610	3	797	1700mm	1714-1717mm	1714-1734mm
279	5	620	3	797	1710mm	1724-1727mm	1724-1744mm
279	5	630	3	797	1720mm	1734-1737mm	1734-1754mm
279	5	640	3	797	1730mm	1744-1747mm	1744-1764mm
329	5	600	3	797	1740mm	1754-1757mm	1754-1774mm
329	5	610	3	797	1750mm	1764-1767mm	1764-1784mm
329	5	620	3	797	1760mm	1774-1777mm	1774-1794mm
329	5	630	3	797	1770mm	1784-1787mm	1784-1804mm
329	5	640	3	797	1780mm	1794-1797mm	1794-1814mm
379	5	600	3	797	1790mm	1804-1807mm	1804-1824mm
379	5	610	3	797	1800mm	1814-1817mm	1814-1834mm
379	5	620	3	797	1810mm	1824-1827mm	1824-1844mm
379	5	630	3	797	1820mm	1834-1837mm	1834-1854mm
379	5	640	3	797	1830mm	1844-1847mm	1844-1864mm
429	5	600	3	797	1840mm	1854-1857mm	1854-1874mm
429	5	610	3	797	1850mm	1864-1867mm	1864-1884mm
429	5	620	3	797	1860mm	1874-1877mm	1874-1894mm
429	5	630	3	797	1870mm	1884-1887mm	1884-1904mm
429	5	640	3	797	1880mm	1894-1897mm	1894-1914mm
479	5	600	3	797	1890mm	1904-1907mm	1904-1924mm
479	5	610	3	797	1900mm	1914-1917mm	1914-1934mm
479	5	620	3	797	1910mm	1924-1927mm	1924-1944mm
479	5	630	3	797	1920mm	1934-1937mm	1934-1954mm
479	5	640	3	797	1930mm	1944-1947mm	1944-1964mm
529	5	600	3	797	1940mm	1954-1957mm	1954-1974mm
529	5	610	3	797	1950mm	1964-1967mm	1964-1984mm
529	5	620	3	797	1960mm	1974-1977mm	1974-1994mm
529	5	630	3	797	1970mm	1984-1987mm	1984-2004mm
529	5	640	3	797	1980mm	1994-1997mm	1994-2014mm
579	5	600	3	797	1990mm	2004-2007mm	2004-2024mm
579	5	610	3	797	2000mm	2014-2017mm	2014-2034mm
579	5	620	3	797	2010mm	2024-2027mm	2024-2044mm
579	5	630	3	797	2020mm	2034-2037mm	2034-2054mm
579	5	640	3	797	2030mm	2044-2047mm	2044-2064mm

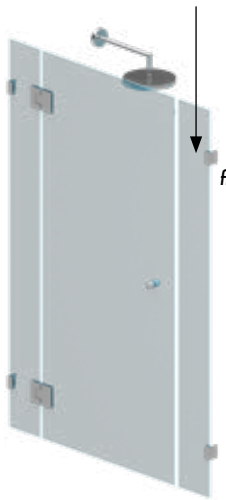

*Featuring **797mm** fixed panel*

CONTINUED ON FOLLOWING PAGE...

HINGE & DOOR PANEL WITH INFILL PANEL

B GLASS HINGE PANEL WIDTH (MM)	C HINGE GAP (MM)	D GLASS DOOR PANEL WIDTH (MM)	E GAP (MM)	F GLASS FIXED PANEL WIDTH (MM)	A & G – OPTION 1 OVERALL WIDTH (MM) *Using wall bracket both sides*	A & G – OPTION 2 OVERALL WIDTH (MM) *Using U Channel both sides*	A & G – OPTION 3 OVERALL WIDTH (MM) *Using "Extended" U Channel both sides*
229	5	600	3	897	1740mm	1754-1757mm	1754-1774mm
229	5	610	3	897	1750mm	1764-1767mm	1764-1784mm
229	5	620	3	897	1760mm	1774-1777mm	1774-1794mm
229	5	630	3	897	1770mm	1784-1787mm	1784-1804mm
229	5	640	3	897	1780mm	1794-1797mm	1794-1814mm
279	5	600	3	897	1790mm	1804-1807mm	1804-1824mm
279	5	610	3	897	1800mm	1814-1817mm	1814-1834mm
279	5	620	3	897	1810mm	1824-1827mm	1824-1844mm
279	5	630	3	897	1820mm	1834-1837mm	1834-1854mm
279	5	640	3	897	1830mm	1844-1847mm	1844-1864mm
329	5	600	3	897	1840mm	1854-1857mm	1854-1874mm
329	5	610	3	897	1850mm	1864-1867mm	1864-1884mm
329	5	620	3	897	1860mm	1874-1877mm	1874-1894mm
329	5	630	3	897	1870mm	1884-1887mm	1884-1904mm
329	5	640	3	897	1880mm	1894-1897mm	1894-1914mm
379	5	600	3	897	1890mm	1904-1907mm	1904-1924mm
379	5	610	3	897	1900mm	1914-1917mm	1914-1934mm
379	5	620	3	897	1910mm	1924-1927mm	1924-1944mm
379	5	630	3	897	1920mm	1934-1937mm	1934-1954mm
379	5	640	3	897	1930mm	1944-1947mm	1944-1964mm
429	5	600	3	897	1940mm	1954-1957mm	1954-1974mm
429	5	610	3	897	1950mm	1964-1967mm	1964-1984mm
429	5	620	3	897	1960mm	1974-1977mm	1974-1994mm
429	5	630	3	897	1970mm	1984-1987mm	1984-2004mm
429	5	640	3	897	1980mm	1994-1997mm	1994-2014mm
479	5	600	3	897	1990mm	2004-2007mm	2004-2024mm
479	5	610	3	897	2000mm	2014-2017mm	2014-2034mm
479	5	620	3	897	2010mm	2024-2027mm	2024-2044mm
479	5	630	3	897	2020mm	2034-2037mm	2034-2054mm
479	5	640	3	897	2030mm	2044-2047mm	2044-2064mm
529	5	600	3	897	2040mm	2054-2057mm	2054-2074mm
529	5	610	3	897	2050mm	2064-2067mm	2064-2084mm
529	5	620	3	897	2060mm	2074-2077mm	2074-2094mm
529	5	630	3	897	2070mm	2084-2087mm	2084-2104mm
529	5	640	3	897	2080mm	2094-2097mm	2094-2114mm
579	5	600	3	897	2090mm	2104-2107mm	2104-2124mm
579	5	610	3	897	2100mm	2114-2117mm	2114-2134mm
579	5	620	3	897	2110mm	2124-2127mm	2124-2144mm
579	5	630	3	897	2120mm	2134-2137mm	2134-2154mm
579	5	640	3	897	2130mm	2144-2147mm	2144-2164mm

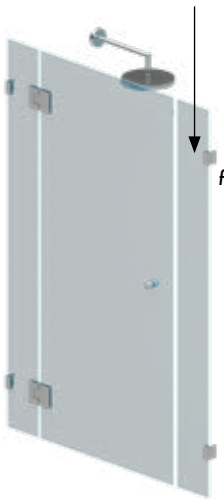

**NOTE: These tables show configurations possible using up to 897mm wide fixed panels (Column F). Larger spans are possible by using wider fixed panels. Refer p56 for wider fixed panels available.*

A configuration with a door leading into a fixed/infill panel can be installed with a return panel.

Below diagrams illustrate 2 ways a return panel may be installed.

In both instances a silicone butt join is required which can be a technically challenging undertaking and should only be attempted by experienced glaziers.

TOP VIEW
RETURN PANEL BUTTS TO INFILL PANEL

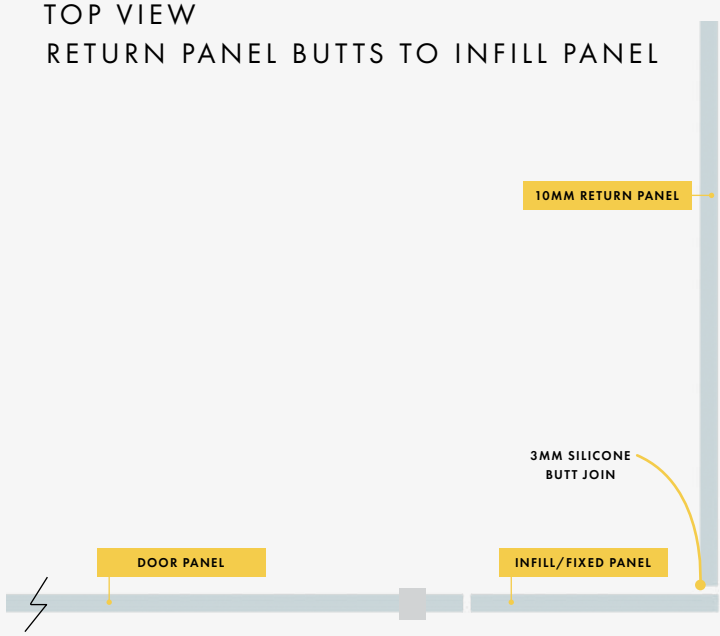

TOP VIEW
INFILL PANEL BUTTS TO RETURN PANEL

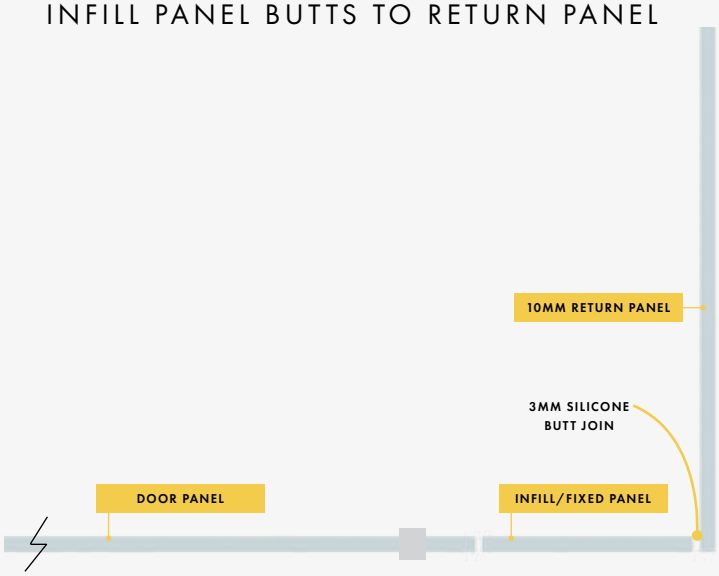

PURITY CORNER CONFIGURATIONS

Overview

The classic corner shower offers many possible size configurations with our hinge panels, door panels and return panels.

This guide outlines the sizes achievable with our range of shower doors, hinge panels and return panels.

- 10mm thick clear toughened
- 1mm radius corners
- Individually boxed panels
- Flat polished edges

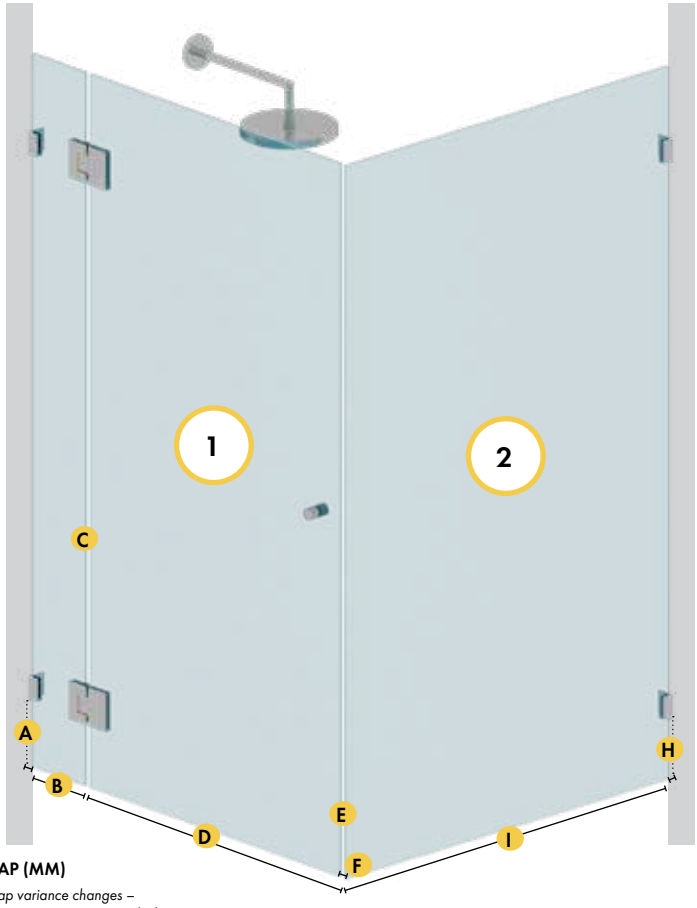

A BRACKET GAP (MM)
***if channel used, gap variance changes – refer last 2 columns for OVERALL WIDTH calculation*

B GLASS HINGE PANEL WIDTH (MM)

C HINGE GAP (MM)

D GLASS DOOR PANEL WIDTH (MM)

E GAP (MM)

F THICKNESS OF RETURN PANEL GLASS (MM)

H BRACKET OR CHANNEL GAP (MM)

I GLASS RETURN PANEL WIDTH (MM)

For the return/fixed panel, refer to table below.

2 RETURN/FIXED PANEL:		USING WALL BRACKET	USING DRY GLAZE U CHANNEL	USING EXTENDED DRY GLAZE U CHANNEL
H BRACKET GAP (MM)	I GLASS FIXED PANEL WIDTH (MM)	OVERALL RETURN WIDTH (MM)	*If using dry glaze U channel instead of wall brackets, OVERALL WIDTH becomes*	*If using "EXTENDED" dry glaze U channel instead of wall brackets, OVERALL WIDTH range becomes*
3	597	600mm	607-610mm	607-622mm
3	697	700mm	707-710mm	707-722mm
3	797	800mm	807-810mm	807-822mm
3	847	850mm	857-860mm	857-872mm
3	872	875mm	882-885mm	882-897mm
3	897	900mm	907-910mm	907-922mm
3	922	925mm	932-935mm	932-947mm
3	947	950mm	957-960mm	957-972mm
3	972	975mm	982-985mm	982-997mm
3	997	1000mm	1007-1010mm	1007-1022mm
3	1022	1025mm	1032-1035mm	1032-1047mm
3	1047	1050mm	1057-1060mm	1057-1072mm
3	1097	1100mm	1107-1110mm	1107-1122mm
3	1147	1150mm	1157-1160mm	1157-1172mm
3	1197	1200mm	1207-1210mm	1207-1222mm
3	1297	1300mm	1307-1310mm	1307-1322mm
3	1397	1400mm	1407-1410mm	1407-1422mm

PURITY CORNER CONFIGURATIONS

For the inline section, refer to table below.

1

HINGE & DOOR PANEL:

A BRACKET GAP (MM)	B GLASS HINGE PANEL WIDTH (MM)	C HINGE GAP (MM)	D GLASS DOOR PANEL WIDTH (MM)	E GAP (MM)	F RETURN PANEL THICKNESS OF GLASS (MM)	USING WALL BRACKET: OVERALL INLINE WIDTH (MM)	USING DRY GLAZE U CHANNEL: *If using dry glaze U channel instead of wall brackets, OVERALL WIDTH becomes*	USING EXTENDED DRY GLAZE U CHANNEL: *If using "EXTENDED" dry glaze U channel instead of wall brackets, OVERALL WIDTH range becomes*
3	229	5	600	3	10	850mm	857-860mm	857-872mm
3	229	5	610	3	10	860mm	867-870mm	867-882mm
3	229	5	620	3	10	870mm	877-880mm	877-892mm
3	229	5	630	3	10	880mm	887-890mm	887-902mm
3	229	5	640	3	10	890mm	897-900mm	897-912mm
3	279	5	600	3	10	900mm	907-910mm	907-922mm
3	279	5	610	3	10	910mm	917-920mm	917-932mm
3	279	5	620	3	10	920mm	927-930mm	927-942mm
3	279	5	630	3	10	930mm	937-940mm	937-952mm
3	279	5	640	3	10	940mm	947-950mm	947-962mm
3	329	5	600	3	10	950mm	957-960mm	957-972mm
3	329	5	610	3	10	960mm	967-970mm	967-982mm
3	329	5	620	3	10	970mm	977-980mm	977-992mm
3	329	5	630	3	10	980mm	987-990mm	987-1002mm
3	329	5	640	3	10	990mm	997-1000mm	997-1012mm
3	379	5	600	3	10	1000mm	1007-1010mm	1007-1022mm
3	379	5	610	3	10	1010mm	1017-1020mm	1017-1032mm
3	379	5	620	3	10	1020mm	1027-1030mm	1027-1042mm
3	379	5	630	3	10	1030mm	1037-1040mm	1037-1052mm
3	379	5	640	3	10	1040mm	1047-1050mm	1047-1062mm
3	429	5	600	3	10	1050mm	1057-1060mm	1057-1072mm
3	429	5	610	3	10	1060mm	1067-1070mm	1067-1082mm
3	429	5	620	3	10	1070mm	1077-1080mm	1077-1092mm
3	429	5	630	3	10	1080mm	1087-1090mm	1087-1102mm
3	429	5	640	3	10	1090mm	1097-1100mm	1097-1112mm
3	479	5	600	3	10	1100mm	1107-1110mm	1107-1122mm
3	479	5	610	3	10	1110mm	1117-1120mm	1117-1132mm
3	479	5	620	3	10	1120mm	1127-1130mm	1127-1142mm
3	479	5	630	3	10	1130mm	1137-1140mm	1137-1152mm
3	479	5	640	3	10	1140mm	1147-1150mm	1147-1162mm
3	529	5	600	3	10	1150mm	1157-1160mm	1157-1172mm
3	529	5	610	3	10	1160mm	1167-1170mm	1167-1182mm
3	529	5	620	3	10	1170mm	1177-1180mm	1177-1192mm
3	529	5	630	3	10	1180mm	1187-1190mm	1187-1202mm
3	529	5	640	3	10	1190mm	1197-1200mm	1197-1212mm
3	579	5	600	3	10	1200mm	1207-1210mm	1207-1222mm
3	579	5	610	3	10	1210mm	1217-1220mm	1217-1232mm
3	579	5	620	3	10	1220mm	1227-1230mm	1227-1242mm
3	579	5	630	3	10	1230mm	1237-1240mm	1237-1252mm
3	579	5	640	3	10	1240mm	1247-1250mm	1247-1262mm

LINEA

FULLY FRAMED KITS

In bathroom design, the trend of minimalism continues to grow in popularity.

Linea complete kits are available for fast and easy framing of 6mm glass with a stylish 25x15mm profile (in bright polish or matt black). A slimline U channel ensures ease of install to walls even if out of square.

An optional horizontal support arm is available which can be width adjusted if required.

Kits include all aluminium extrusions, glazing rubbers, joiners and screws – simply arrange 6mm toughened glass to required size and assemble the frame to the glass. Linea shower screens can be made up to 2450mm high x 1450mm wide.

Contact us for a simple to use cutting list and glass size specifier.

Cost effective, simple and stylish – Linea kits are an ideal bath or shower screen solution.

KITS IN A BOX FOR CUSTOM MADE SIZES

Purchase a complete kit in a box for simple fabrication to suit custom sized glass.
Everything required for a Linea frame is in the kit! Simply order 6mm custom glass separately.

Contact us for cutting list & glass size specifier

Linea complete frame kit in a box

BRIGHT POLISH FINISH

Order Code: **LINEA-KIT-P (Bright polish)**
Makes frame up to 2450mm x 1450mm
(Suits 6mm glass – not included)

Includes:
1 x 2450mm long Wall U Channel – Bright polish aluminium 6463-T5
2 x 2450mm long Vertical Side Frame – Bright polish aluminium 6463-T5
2 x 1450mm long Top/Bottom Frame – Bright polish aluminium 6463-T5
2 x 2450mm long glazing rubber – PVC
2 x 1450mm long glazing rubber – PVC
4 x Internal Corner stakes – rigid PVC
6 x 6mm diameter x 29mm wall plugs – PVC
6 x ST4x30 pan head wall screws – SS3304
6 x ST4x10 CSK fixing screws – SS304
6 x Screw covers – PVC

Linea complete frame kit in a box

MATT BLACK POWDER COATED FINISH

Order Code: **LINEA-KIT-B (Matt black)**
Makes frame up to 2450mm x 1450mm
(Suits 6mm glass – not included)

Includes:
1 x 2450mm long Wall U Channel – Matt black powder coated aluminium 6463-T5
2 x 2450mm long Vertical Side Frame – Matt black powder coated aluminium 6463-T5
2 x 1450mm long Top/Bottom Frame – Matt black powder coated aluminium 6463-T5
2 x 2450mm long glazing rubber – PVC
2 x 1450mm long glazing rubber – PVC
4 x Internal Corner stakes – rigid PVC
6 x 6mm diameter x 29mm wall plugs – PVC
6 x ST4x30 pan head wall screws – SS3304
6 x ST4x10 CSK fixing screws – SS304
6 x Screw covers – PVC

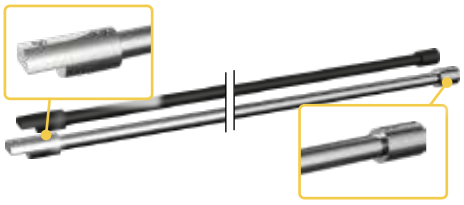

1200mm wide horizontal support arm

WIDTH ADJUSTABLE

Order Code: **LINEA-ARM-P (Bright polish)**
LINEA-ARM-B (Matt black)

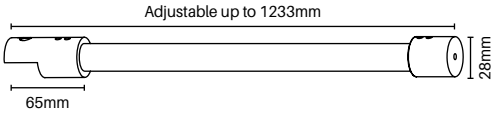

Simply cut tube to required length

LINEA

FULLY FRAMED KITS

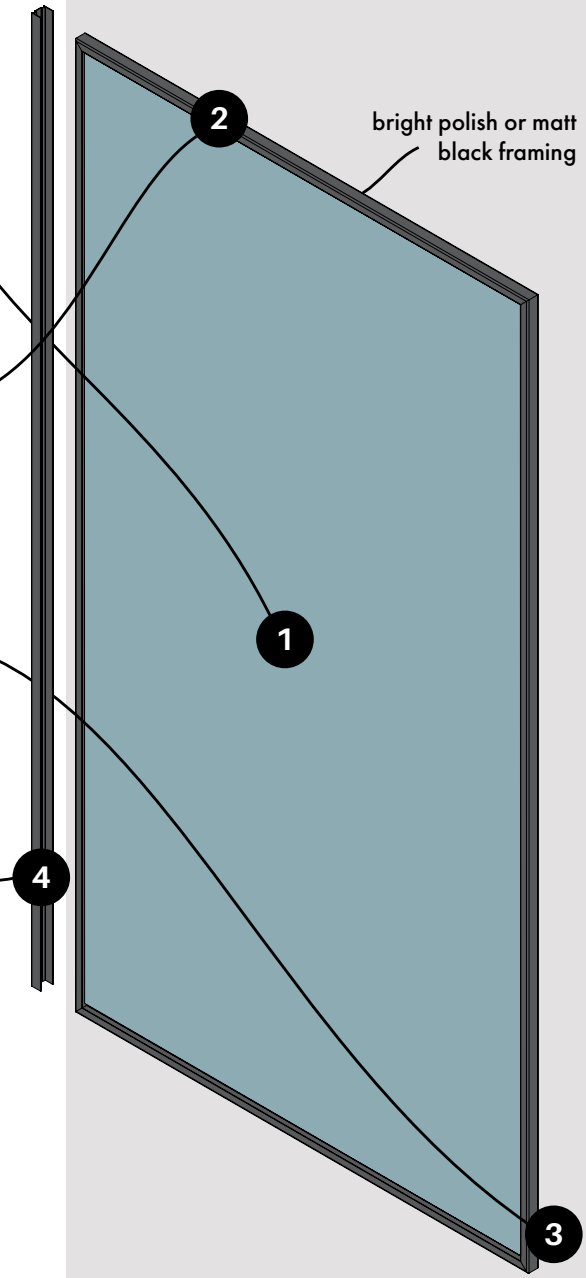

6 mm toughened glass panel

Order custom size glass as required
(not included in kit)

Durable aluminium frame

Fully framed durable aluminium extrusion (15mm wide x 25mm deep) available in bright polish finish or matt black powder coat

Specially designed corner stakes

Special internal 90° corner stakes to ensure mitred corners stay perfectly together

Fast U channel installation

28mm x 20mm U channel allows for quick and easy installation and provides 5mm of width adjustability. U channel also aids with installing on out of square walls

STAL SLIDING SHOWER SCREENS

STÄL

ARCHITECTURAL FRAMELESS SLIDING SHOWER SCREEN

A beautiful, frameless sliding showerscreen system designed to stand out from the rest, with only the best fittings used.

The STÄL system is ideal for wide openings and can be used in both inline and 90° applications.

Achieve any installation size between 1200mm wide to 1940mm wide with modular panels or custom made glass.

Hardware available in high polish, matt black, brushed nickel or brushed gold finish.

IDEAL FOR WIDE OPENINGS

STAL CONFIGURATIONS

in Inline installation

90° 90° corner installation

Images & drawings are not to scale

STAL HARDWARE GUIDE – POLISH FINISH

SELECT HARDWARE OPTIONS

Stäl kit in 90°

POLISH FINISH / SS304
Order Code: **STAL-KIT (Polish)**
Kit includes:
1 x Recessed Round Handle; 2 x Door Upper Rollers;
2 x Door Stabiliser Guides; 2 x Fixed Panel Rail Connectors;
2 x Stoppers; 1 x Floor Guide; 2 x Rail Wall Brackets;
3 x Hex/Allen Keys

1x Recessed Round Handle

2x Door upper rollers

2x Door stabiliser guides
offset screws allow height adjustment of guides

2x Fixed panel rail connectors

2x Stoppers

1x floor guide

2x rail wall brackets

IMPORTANT!
Use Loctite 242 or Ultraloc 3242 threadlocker with screws

SELECT RAIL

Pre-drilled rail in 90°

POLISH FINISH – SS304
Order codes:
STAL-RAIL-1650 (1650mm long)
STAL-RAIL-1950 (1950mm long)
Rail dimensions: 30mm high x 10mm wide

Pre-drilled rail is ready to install with modular panels. Pre-drilled holes align with the 4x modular glass fixed panel holes.

Simply cut down rail ends to desired overall width and install rail and glass panels.

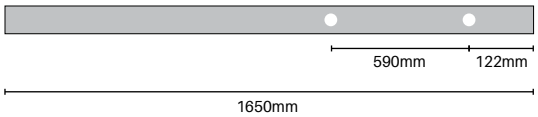

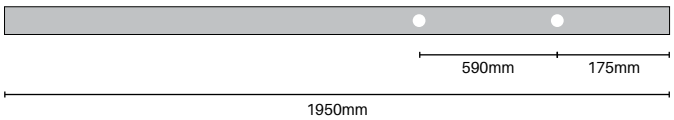

OR

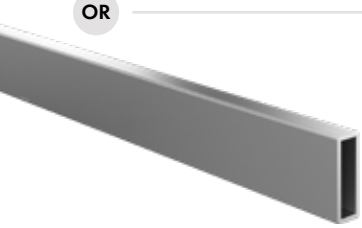

Blank rail in 90°

POLISH FINISH – SS304
Order codes:
STAL-RBLANK-1650 (1650mm long)
STAL-RBLANK-1950 (1950mm long)
Rail dimensions: 30mm high x 10mm wide

Custom drilling of rail holes enables flexibility for unique install situations where pre-drilled rails do not suit.

Enables drilling for configurations such as PANEL > DOOR > PANEL

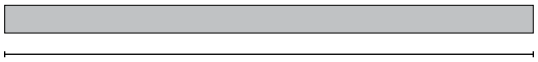

Images & drawings are not to scale

STAL HARDWARE GUIDE – POLISH FINISH

WALL BRACKET OPTIONS

in 90°

Wall bracket

CHROME PLATED
Order code: **P-WB**
Wall bracket – Use to install fixed glass panels to wall

OR

in 90°

Offset wall Bracket

CHROME PLATED
Order code: **P-WB-O**
Install fixed glass panels to wall

in 90°

Slimline rail wall Bracket

POLISH FINISH SS304
Order code: **STAL-RWBS**
Only required if using a 650mm wide modular fixed glass panel

SEALS, BUMPERS & WATER BARS

in 90°

Door bumper Stopper

PVC – 2130MM L
Order code: **STAL-D10-2130**
Suits 10mm glass
10mm bulb
Prevents contact between glass door & wall

in 90°

OPTIONAL

Water seal

PVC – 2130MM L
Order code: **STAL-FP10-2130**
Suits 10mm glass – 26mm L
Flexible PVC fin – Reduce water escape between door & fixed panel

in 90°

OPTIONAL

Water bar

POLISHED ALUMINIUM
Order code:
P-BAR12-2000-PA (round); or
P-BAR10SQ-2000-PA (square)
Round dimension:
6mmH x 12mmW x 2000mmL
Square dimension:
9mmH x 10mmW x 2000mmL

OPTIONAL EXTRAS

90°

90° bracket

POLISH FINISH – SS304
Order code: **STAL-90J**
Required when installing with a glass return panel
2 x modular glass return panel sizes available or custom make glass as needed

Return panel measuring tips

- Return panel width measured from wall to front face of front/fixed inline panel
- If using a wall bracket to affix return panel to wall, a deduction needs to be made to the glass return panel width to allow for bracket gap (commonly 3 to 5mm)
- When measuring width of fixed panel and door panel when using a return panel, width is measured from wall to inside edge of 10mm thick return panel

Rail connector

POLISH FINISH – SS304
Order code: **STAL-RC**

Used for extra fixings to stainless steel rail.
Example: If fabricating a 3 panel set up
FIXED PANEL > DOOR > FIXED PANEL

Bostik 6s silicone

300g TUBE
Order code: **P-S-6S**
Translucent finish
High performance neutral cure silicone sealant with mould inhibitor

Soudal silicone

TRANSLUCENT
300g TUBE
Order code: **SOUD-KBS-TRANS**
Translucent finish
High performance neutral cure silicone

COVERS UP TO 8SQM

Enduroshield kit

Order code: **ENDURO-GC-125**
Kit includes:
125m EnduroShield Glass Home Surface Treatment
250ml EnduroClean Pre-Cleaner
Fine Steel Wool & Polishing Cloth
Instructions (Step by Step)
3 Year limited warranty

Clear setting blocks

PACK OF 20
Order code: **P-SB-1.5MM-20PK**
P-SB-3MM-20PK

1.5mm or 3mm x 12mm x 50mm High
Use to sit fixed glass panels on (use in conjunction with silicone)
Available in 1.5mm or 3mm thick

Ultraloc threadlocker 3242 compound

10ml BOTTLE
Order code: **ULTRALOC-3242**
Medium strength removable grade threadlocking compound

Images & drawings are not to scale

STAL HARDWARE GUIDE – MATT BLACK

SELECT HARDWARE OPTIONS

Stäl kit in 90°

MATT BLACK FINISH / SS304
Order Code: **STAL-KIT-B (Matt black)**
Kit includes:
1 x Recessed Round Handle; 2 x Door Upper Rollers;
2 x Door Stabiliser Guides; 2 x Fixed Panel Rail Connectors;
2 x Stoppers; 1 x Floor Guide; 2 x Rail Wall Brackets;
3 x Hex/Allen Keys

1x Recessed Round Handle

2x Door upper rollers

2x Door stabiliser guides
offset screws allow height adjustment of guides

2x Fixed panel rail connectors

2x Stoppers

1x floor guide

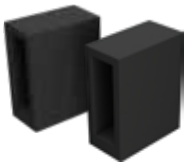

2x rail wall brackets

IMPORTANT!
Use Loctite 242 or Ultraloc 3242 threadlocker with screws

SELECT RAIL

Pre-drilled rail in 90°

MATT BLACK FINISH – SS304
Order codes:
STAL-RAIL-1650-B (1650mm long)
STAL-RAIL-1950-B (1950mm long)
Rail dimensions: 30mm high x 10mm wide

Pre-drilled rail is ready to install with modular panels. Pre-drilled holes align with the 4x modular glass fixed panel holes.

Simply cut down rail ends to desired overall width and install rail and glass panels.

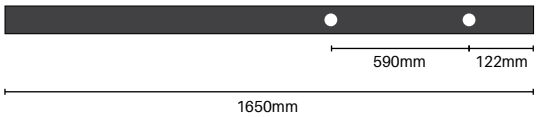

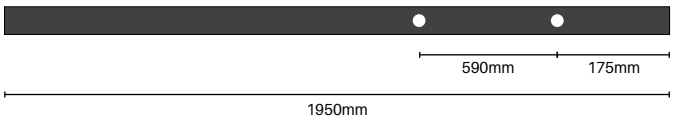

OR

Blank rail in 90°

MATT BLACK FINISH – SS304
Order codes:
STAL-RBLANK-1650-B (1650mm long)
STAL-RBLANK-1950-B (1950mm long)
Rail dimensions: 30mm high x 10mm wide

Custom drilling of rail holes enables flexibility for unique install situations where pre-drilled rails do not suit.

Enables drilling for configurations such as PANEL > DOOR > PANEL

Images & drawings are not to scale

STAL HARDWARE GUIDE – MATT BLACK

WALL BRACKET OPTIONS

in 90°

Wall bracket

MATT BLACK
Order code: **PN-WB**
Wall bracket – Use to install fixed glass panels to wall

OR

in 90°

Offset wall Bracket

MATT BLACK
Order code: **PN-WB-O**
Install fixed glass panels to wall

in 90°

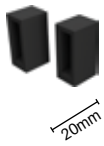

Slimline rail Wall bracket

MATT BLACK
SS304
Order code: **STAL-RWBS-B**
Only required if using a 650mm wide modular fixed glass panel

SEALS, BUMPERS & WATER BARS

in 90°

Door bumper Stopper

PVC – 2130MM L
Order code: **STAL-D10-2130**
Suits 10mm glass
10mm bulb
Prevents contact between glass door & wall

in 90°

OPTIONAL
Water seal

PVC – 2130MM L
Order code: **STAL-FP10-2130**
Suits 10mm glass – 26mm L
Flexible PVC fin – Reduce water escape between door & fixed panel

in 90°

OPTIONAL
Water bar

MATT BLACK ALUMINIUM
Order code:
P-BAR12-2000-B (round); or
P-BAR10SQ-2000-B (square)
Round dimension:
6mmH x 12mmW x 2000mmL
Square dimension:
9mmH x 10mmW x 2000mmL

OPTIONAL EXTRAS

90°

90° bracket

MATT BLACK – SS304
Order code: **STAL-90J-B**
Required when installing with a glass return panel
2 x modular glass return panel sizes available or custom make glass as needed

Return panel measuring tips

- Return panel width measured from wall to front face of front/fixed inline panel
- If using a wall bracket to affix return panel to wall, a deduction needs to be made to the glass return panel width to allow for bracket gap (commonly 3 to 5mm)
- When measuring width of fixed panel and door panel when using a return panel, width is measured from wall to inside edge of 10mm thick return panel

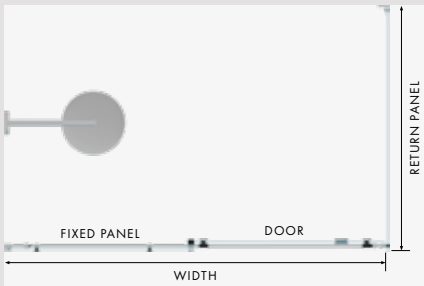

Rail connector

MATT BLACK – SS304
Order code: **STAL-RC-B**

Used for extra fixings to stainless steel rail.
Example: If fabricating a 3 panel set up
FIXED PANEL > DOOR > FIXED PANEL

Bostik 6s silicone

300g TUBE
Order code: **P-S-6S**
Translucent finish
High performance neutral cure silicone sealant with mould inhibitor

Soudal silicone

TRANSLUCENT
300g TUBE
Order code: **SOUD-KBS-TRANS**
Translucent finish
High performance neutral cure silicone

Enduroshield kit

Order code: **ENDURO-GC-125**
Kit includes:
125m EnduroShield Glass Home Surface Treatment
250ml EnduroClean Pre-Cleaner
Fine Steel Wool & Polishing Cloth
Instructions (Step by Step)
3 Year limited warranty

COVERS UP TO 8SQM

Clear setting blocks

PACK OF 20
Order code: **P-SB-1.5MM-20PK**
P-SB-3MM-20PK

1.5mm or 3mm x 12mm x 50mm High
Use to sit fixed glass panels on (use in conjunction with silicone)
Available in 1.5mm or 3mm thick

Ultraloc threadlocker 3242 compound

10ml BOTTLE
Order code: **ULTRALOC-3242**

Medium strength removable grade threadlocking compound

Images & drawings are not to scale

STAL HARDWARE GUIDE – BRUSHED NICKEL

SELECT HARDWARE OPTIONS

Stäl kit in 90°

BRUSHED NICKEL – SS304

Order Code: **STAL-KIT-NIKL (Brushed Nickel)**

Kit includes:
1 x Recessed Round Handle; 2 x Door Upper Rollers;
2 x Door Stabiliser Guides; 2 x Fixed Panel Rail Connectors;
2 x Stoppers; 1 x Floor Guide; 2 x Rail Wall Brackets;
3 x Hex/Allen Keys

1x Recessed Round Handle

2x Door upper rollers

2x Door stabiliser guides
offset screws allow height adjustment of guides

2x Fixed panel rail connectors

2x Stoppers

1x floor guide

2x rail wall brackets

IMPORTANT!
Use Loctite 242 or Ultraloc 3242 threadlocker with screws

SELECT RAIL

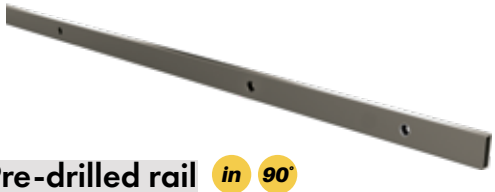

Pre-drilled rail in 90°

BRUSHED NICKEL – SS304

Order codes:
STAL-RAIL-1650-NIKL (1650mm long)
STAL-RAIL-1950-NIKL (1950mm long)

Rail dimensions: 30mm high x 10mm wide

Pre-drilled rail is ready to install with modular panels. Pre-drilled holes align with the 4x modular glass fixed panel holes.

Simply cut down rail ends to desired overall width and install rail and glass panels.

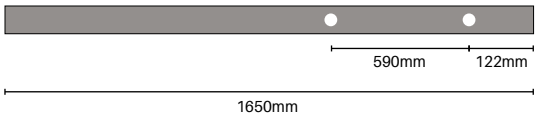

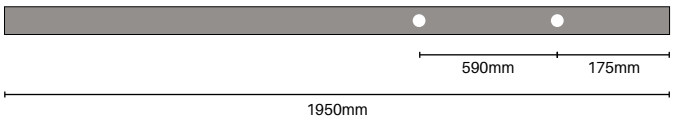

OR

Blank rail in 90°

BRUSHED NICKEL – SS304

Order codes:
STAL-RBLANK-1650-NIKL (1650mm long)
STAL-RBLANK-1950-NIKL (1950mm long)

Rail dimensions: 30mm high x 10mm wide

Custom drilling of rail holes enables flexibility for unique install situations where pre-drilled rails do not suit.

Enables drilling for configurations such as PANEL > DOOR > PANEL

Images & drawings are not to scale

STAL HARDWARE GUIDE – BRUSHED NICKEL

WALL BRACKET OPTIONS

in 90°

Wall bracket

BRUSHED NICKEL – SS304
Order code: **P-NIKL-WB**
Wall bracket – Use to install fixed glass panels to wall

OR

in 90°

Offset wall Bracket

BRUSHED NICKEL – SS304
Order code: **P-NIKL-WB-O**
Install fixed glass panels to wall

in 90°

Slimline rail wall Bracket

BRUSHED NICKEL – SS304
Order code: **STAL-RWBS-NIKL**
Only required if using a 650mm wide modular fixed glass panel

SEALS, BUMPERS & WATER BARS

in 90°

Door bumper Stopper

PVC – 2130MM L
Order code: **STAL-D10-2130**
Suits 10mm glass
10mm bulb
Prevents contact between glass door & wall

in 90°

OPTIONAL

Water seal

PVC – 2130MM L
Order code: **STAL-FP10-2130**
Suits 10mm glass – 26mm L
Flexible PVC fin – Reduce water escape between door & fixed panel

in 90°

OPTIONAL

Water bar

ALUMINIUM
Order code:
P-BAR12-2000-NIKL (round); or
P-BAR10SQ-2000-NIKL (square)
Round dimension:
6mmH x 12mmW x 2000mmL
Square dimension:
9mmH x 10mmW x 2000mmL

OPTIONAL EXTRAS

90°

90° bracket

BRUSHED NICKEL – SS304
Order code: **STAL-90J-NIKL**
Required when installing with a glass return panel
2 x modular glass return panel sizes available or custom make glass as needed

Return panel measuring tips

- Return panel width measured from wall to front face of front/fixed inline panel
- If using a wall bracket to affix return panel to wall, a deduction needs to be made to the glass return panel width to allow for bracket gap (commonly 3 to 5mm)
- When measuring width of fixed panel and door panel when using a return panel, width is measured from wall to inside edge of 10mm thick return panel

Rail connector

BRUSHED NICKEL – SS304
Order code: **STAL-RC-NIKL**
Used for extra fixings to stainless steel rail.
Example: If fabricating a 3 panel set up
FIXED PANEL > DOOR > FIXED PANEL

Bostik 6s silicone

300g TUBE
Order code: **P-S-6S**
Translucent finish
High performance neutral cure silicone sealant with mould inhibitor

Soudal silicone

TRANSLUCENT
300g TUBE
Order code: **SOUD-KBS-TRANS**
Translucent finish
High performance neutral cure silicone

Enduroshield kit

Order code: **ENDURO-GC-125**
Kit includes:
125m EnduroShield Glass Home Surface Treatment
250ml EnduroClean Pre-Cleaner
Fine Steel Wool & Polishing Cloth
Instructions (Step by Step)
3 Year limited warranty

COVERS UP TO 8SQM

Clear setting blocks

PACK OF 20
Order code: **P-SB-1.5MM-20PK**
P-SB-3MM-20PK
1.5mm or 3mm x 12mm x 50mm High
Use to sit fixed glass panels on (use in conjunction with silicone)
Available in 1.5mm or 3mm thick

Ultraloc threadlocker 3242 compound

10ml BOTTLE
Order code: **ULTRALOC-3242**
Medium strength removable grade threadlocking compound

Images & drawings are not to scale

STAL HARDWARE GUIDE – BRUSHED BRASS/GOLD

SELECT HARDWARE OPTIONS

Stäl kit in 90°

SS304 BRUSHED BRASS/GOLD FINISH PVD
Order Code: **STAL-KIT-ORO (Gold)**

Kit includes:
1 x Recessed Round Handle; 2 x Door Upper Rollers;
2 x Door Stabiliser Guides; 2 x Fixed Panel Rail Connectors;
2 x Stoppers; 1 x Floor Guide; 2 x Rail Wall Brackets;
3 x Hex/Allen Keys

1x Recessed Round Handle

2x Door upper rollers

2x Door stabiliser guides
offset screws allow height adjustment of guides

2x Fixed panel rail connectors

2x Stoppers

1x floor guide

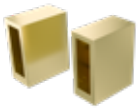

2x rail wall brackets

IMPORTANT!
Use Loctite 242 or Ultraloc 3242 threadlocker with screws

SELECT RAIL

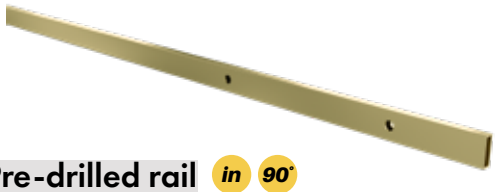

Pre-drilled rail in 90°

SS304 BRUSHED BRASS/GOLD FINISH PVD
Order codes:
STAL-RAIL-1650-ORO (1650mm long)
STAL-RAIL-1950-ORO (1950mm long)

Rail dimensions: 30mm high x 10mm wide

Pre-drilled rail is ready to install with modular panels. Pre-drilled holes align with the 4x modular glass fixed panel holes.

Simply cut down rail ends to desired overall width and install rail and glass panels.

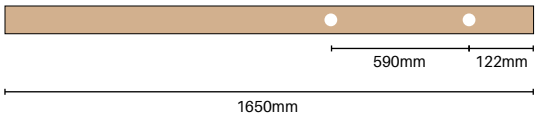

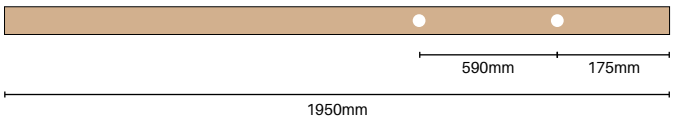

OR

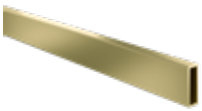

Blank rail in 90°

SS304 BRUSHED BRASS/GOLD FINISH PVD
Order codes:
STAL-RBLANK-1650-ORO (1650mm long)
STAL-RBLANK-1950-ORO (1950mm long)

Rail dimensions: 30mm high x 10mm wide

Custom drilling of rail holes enables flexibility for unique install situations where pre-drilled rails do not suit.

Enables drilling for configurations such as PANEL > DOOR > PANEL

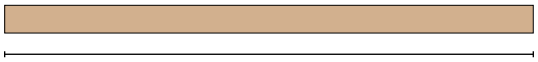

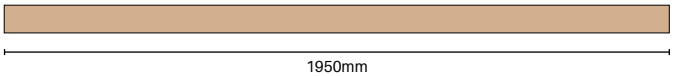

Images & drawings are not to scale

STAL HARDWARE GUIDE – BRUSHED BRASS/GOLD

WALL BRACKET OPTIONS

in 90°

Wall bracket

GOLD FINISH PVD
Order code: **P-ORO-WB**
Wall bracket – Use to install fixed glass panels to wall

OR

in 90°

Offset wall Bracket

GOLD FINISH PVD
Order code: **P-ORO-WB-O**
Install fixed glass panels to wall

in 90°

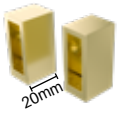

Slimline rail wall Bracket

GOLD FINISH PVD
SS304
Order code: **STAL-RWBS-ORO**
Only required if using a 650mm wide modular fixed glass panel

SEALS, BUMPERS & WATER BARS

in 90°

Door bumper Stopper

PVC – 2130MM L
Order code: **STAL-D10-2130**
Suits 10mm glass
10mm bulb
Prevents contact between glass door & wall

in 90°

OPTIONAL
Water seal

PVC – 2130MM L
Order code: **STAL-FP10-2130**
Suits 10mm glass – 26mm L
Flexible PVC fin – Reduce water escape between door & fixed panel

in 90°

OPTIONAL
Water bar

ALUMINIUM
Order code:
P-BAR12-2000-ORO (round); or
P-BAR10SQ-2000-ORO (square)
Round dimension:
6mmH x 12mmW x 2000mmL
Square dimension:
9mmH x 10mmW x 2000mmL

OPTIONAL EXTRAS

90°

90° bracket

SS304 GOLD FINISH PVD
Order code: **STAL-90J-ORO**
Required when installing with a glass return panel
2 x modular glass return panel sizes available or custom make glass as needed

Return panel measuring tips

- Return panel width measured from wall to front face of front/fixed inline panel
- If using a wall bracket to affix return panel to wall, a deduction needs to be made to the glass return panel width to allow for bracket gap (commonly 3 to 5mm)
- When measuring width of fixed panel and door panel when using a return panel, width is measured from wall to inside edge of 10mm thick return panel

Rail connector

SS304 GOLD FINISH PVD
Order code: **STAL-RC-ORO**

Used for extra fixings to stainless steel rail.
Example: If fabricating a 3 panel set up
FIXED PANEL > DOOR > FIXED PANEL

Bostik 6s silicone

300g TUBE
Order code: **P-S-6S**
Translucent finish
High performance neutral cure silicone sealant with mould inhibitor

Soudal silicone

TRANSLUCENT
300g TUBE
Order code: **SOUD-KBS-TRANS**
Translucent finish
High performance neutral cure silicone

Enduroshield kit

Order code: **ENDURO-GC-125**
Kit includes:
125m EnduroShield Glass Home Surface Treatment
250ml EnduroClean Pre-Cleaner
Fine Steel Wool & Polishing Cloth
Instructions (Step by Step)
3 Year limited warranty

COVERS UP TO 8SQM

Clear setting blocks

PACK OF 20
Order code: **P-SB-1.5MM-20PK**
P-SB-3MM-20PK

1.5mm or 3mm x 12mm x 50mm High
Use to sit fixed glass panels on (use in conjunction with silicone)
Available in 1.5mm or 3mm thick

Ultraloc threadlocker 3242 compound

10ml BOTTLE
Order code: **ULTRALOC-3242**
Medium strength removable grade threadlocking compound

Images & drawings are not to scale

STAL CUSTOM GLASS

Glass Outlet's modular STÄL range of glass provides solutions for most installation situations.
If modular glass is not suitable for your job, the STÄL hardware can be used with custom made 10mm toughened glass.
The specifications below provide guidance for ordering custom made glass panels.

INLINE APPLICATION

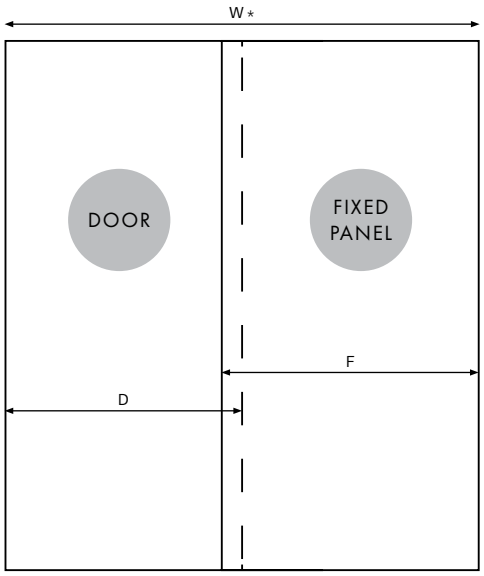

W: WIDTH*
F: FIXED PANEL
D: DOOR

W=1200 to 1940mm
F= (W÷2)+40mm
D= W÷2

*Width is commonly the smallest overall opening size between 2 walls

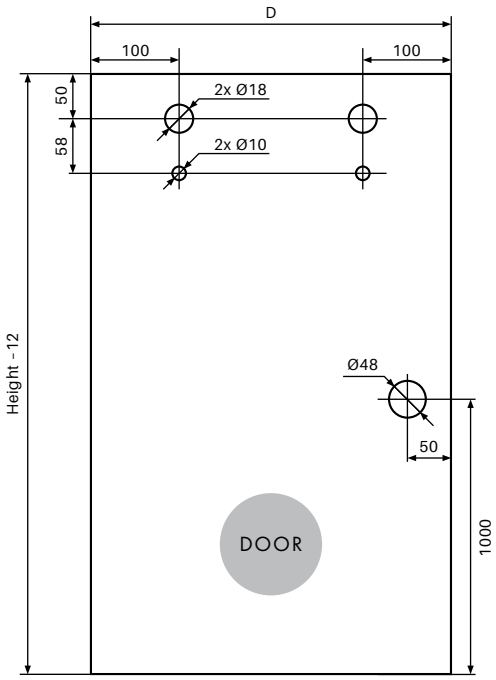

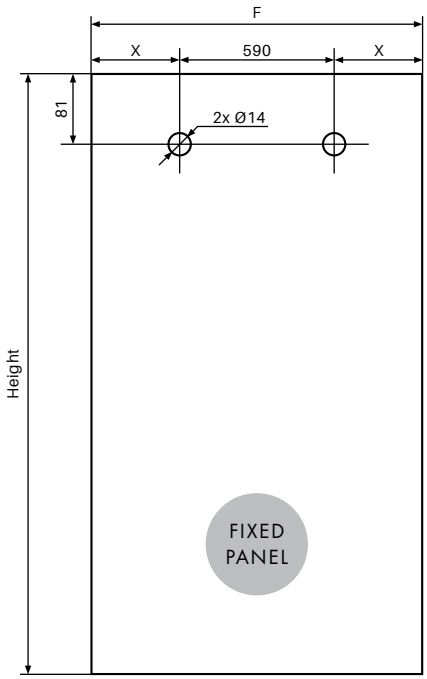

X=(F-590)÷2

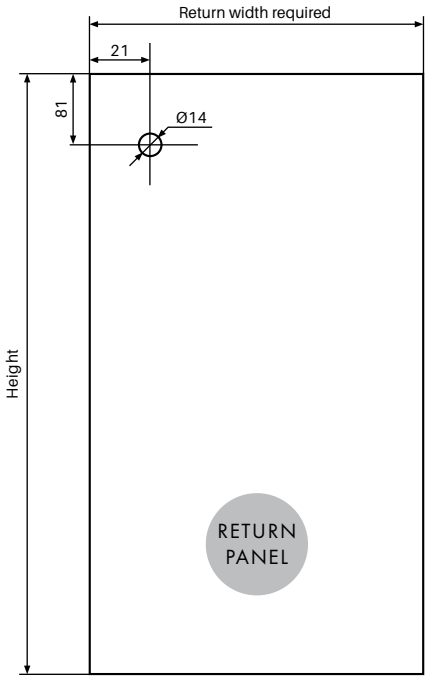

Images & drawings are not to scale

STAL SLIDING SHOWER SYSTEM

With Glass Outlet's range of modular glass panels and hardware, installing the STÄL system into widths from 1200mm wide up to 1940mm wide is easy.

The STÄL system of hardware and glass allows a complete system install at a huge cost saving to custom made glass.

The following pages provide detailed guidance on the modular panels available and exact overlaps of the door and fixed panels as well as entry widths into the shower opening. This detailed information gives you the confidence to know all details prior to commencing an installation.

The below table provides a quick guide as to opening widths and highlights in black what hardware and glass is required.

**NOTE: Table below lists polished product codes as a guide only*

	OVERALL WIDTH (mm)							
CODE	1200-1240	1240-1340	1340-1440	1440-1540	1540-1640	1640-1740	1740-1840	1840-1940
STAL-D-0600	✓							
STAL-F-0650	✓	✓						
STAL-D-0700		✓	✓					
STAL-F-0750			✓	✓				
STAL-D-0800				✓	✓			
STAL-F-0850					✓	✓		
STAL-D-0900						✓	✓	
STAL-F-0950							✓	✓
STAL-D-1000								✓
STAL-KIT	✓	✓	✓	✓	✓	✓	✓	✓
P-WB	x2	x2	x2	x2	x2	x2	x2	x2
STAL-D10-2130	✓	✓	✓	✓	✓	✓	✓	✓
STAL-RAIL-1650	✓	✓	✓	✓				
STAL-RAIL-1950					✓	✓	✓	✓
STAL-RWBS	✓	✓						
P-S-6S	✓	✓	✓	✓	✓	✓	✓	✓
ULTRALOC-3242	✓	✓	✓	✓	✓	✓	✓	✓

SEE PAGES 100-107 FOR ACCURATE GLASS MEASUREMENT LAYOUTS

IMPORTANT

Apply Ultraloc 3242 or equivalent to screw thread and allow 24 hours for full cure.

Do not use shower during this time.

Ultraloc 3242 aids in prevention of the chance of screw loosening resulting in glass door dropping.

STAL MODULAR GLASS PANELS

10mm clear toughened glass; 2mm radius corners
Every panel individually packed in cardboard with pre-drilled holes; ready for installation

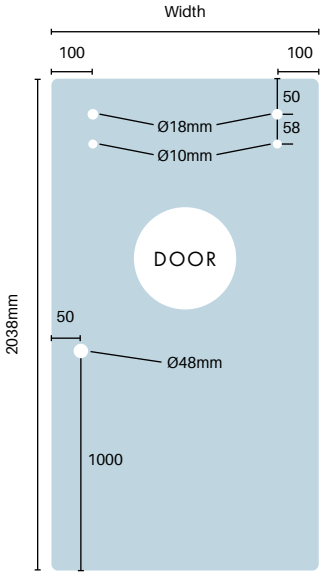

DOOR PANELS

Order Code	Width	Height	Thickness	Sqm	Weight
STAL-D-0600	600mm	2038mm	10mm	1.22	31kg
STAL-D-0700	700mm	2038mm	10mm	1.42	36kg
STAL-D-0800	800mm	2038mm	10mm	1.63	41kg
STAL-D-0900	900mm	2038mm	10mm	1.83	46kg
STAL-D-1000	1000mm	2038mm	10mm	2.04	51kg

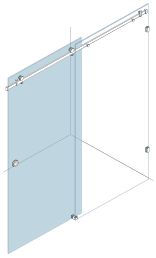

Interchangeable – left or right side

global-mark
Confidence with Commitment

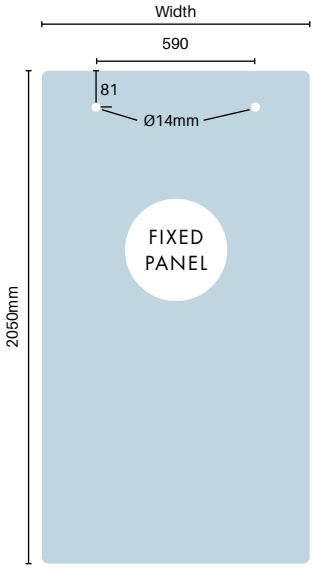

FIXED PANELS

Order Code	Width	Height	Thickness	Sqm	Weight
STAL-F-0650	650mm	2050mm	10mm	1.33	33kg
STAL-F-0750	750mm	2050mm	10mm	1.54	38kg
STAL-F-0850	850mm	2050mm	10mm	1.74	44kg
STAL-F-0950	950mm	2050mm	10mm	1.95	49kg

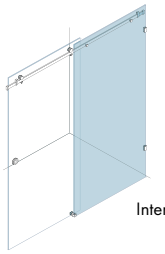

Interchangeable – left or right side

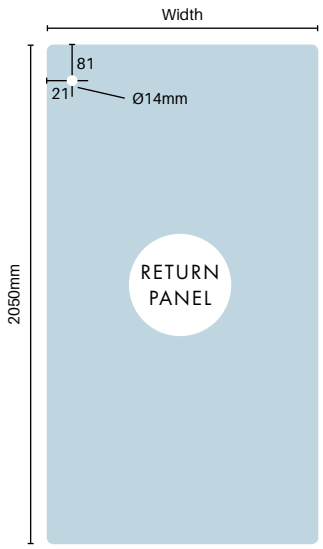

RETURN PANELS

Order Code	Width	Height	Thickness	Sqm	Weight
STAL-R-0897	897mm	2050mm	10mm	1.84	46kg
STAL-R-1197	1197mm	2050mm	10mm	2.45	61kg

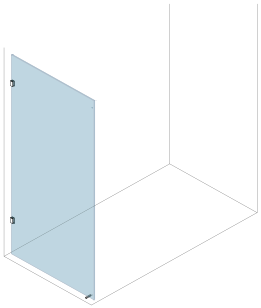

Interchangeable – left or right side

Achieve any installation size from 1200mm wide to 1940mm wide with modular panels or custom made glass

Mix and match system!
5x modular door panels
4x modular fixed panels
2x modular return panels

Superior quality
glass & hardware

Images & drawings are not to scale

DOOR SMALLER THAN FIXED PANEL

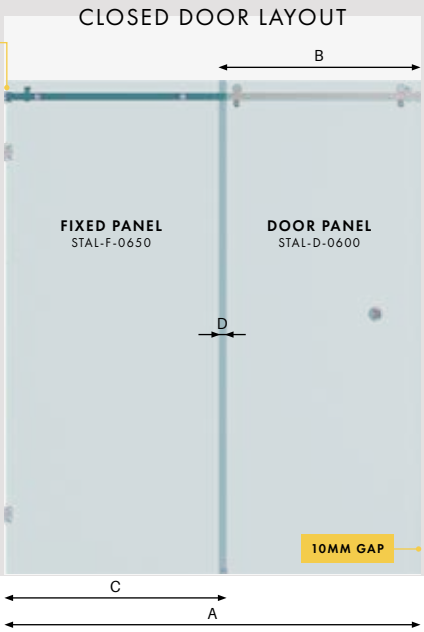

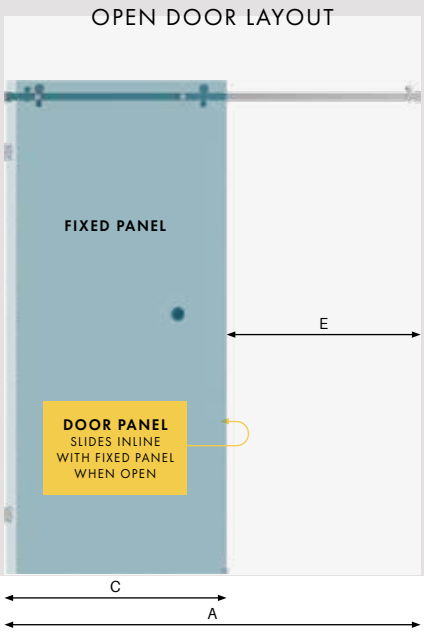

A Overall Width	B Door Width	C Fixed Panel Width	D Overlap With Closed Door	E Opening
1200mm	600mm	650mm	- 63mm	547mm
1205mm	600mm	650mm	- 58mm	552mm
1210mm	600mm	650mm	- 53mm	557mm
1215mm	600mm	650mm	- 48mm	562mm
1220mm	600mm	650mm	- 43mm	567mm
1225mm	600mm	650mm	- 38mm	572mm
1230mm	600mm	650mm	- 33mm	577mm
1235mm	600mm	650mm	- 28mm	582mm
1240mm	600mm	650mm	- 23mm	587mm

SPACINGS BASED ON THESE ASSUMPTIONS:

1. Fixed panel installed with Purity wall brackets which produces a 3mm silicone join gap. If wall channel is used, specified opening sizes overlaps, etc will change.
2. Edge of glass door must remain 10mm from wall. 10mm door bulb recommended to use for buffering or if not used, 10mm safety margin gap required.
3. When door is open, minimum 15mm gap is required from wall (for safety margin buffering).

***When using a 650mm wide fixed panel, it is important to purchase 1x slimline wall bracket separately (STAL-RWBS/STAL-RWBS-B/ STAL-RWBS-ORO/STAL-RWBS-NIKL) due to space restrictions between the rail fixing bracket and the wall.**

DOOR WIDER THAN FIXED PANEL

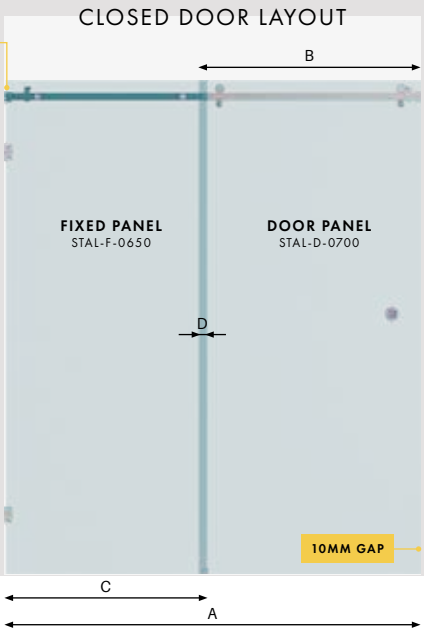

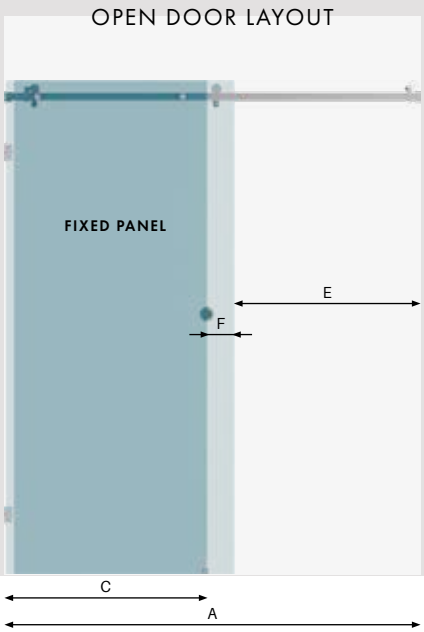

A Overall Width	B Door Width	C Fixed Panel Width	D Overlap With Closed Door	E Opening	F Panel Overlap When Door Open
1240mm	700mm	650mm	- 123mm	525mm	62mm
1245mm	700mm	650mm	- 118mm	530mm	62mm
1250mm	700mm	650mm	- 113mm	535mm	62mm
1255mm	700mm	650mm	- 108mm	540mm	62mm
1260mm	700mm	650mm	- 103mm	545mm	62mm
1265mm	700mm	650mm	- 98mm	550mm	62mm
1270mm	700mm	650mm	- 93mm	555mm	62mm
1275mm	700mm	650mm	- 88mm	560mm	62mm
1280mm	700mm	650mm	- 83mm	565mm	62mm
1285mm	700mm	650mm	- 78mm	570mm	62mm
1290mm	700mm	650mm	- 73mm	575mm	62mm
1295mm	700mm	650mm	- 68mm	580mm	62mm
1300mm	700mm	650mm	- 63mm	585mm	62mm
1305mm	700mm	650mm	- 58mm	590mm	62mm
1310mm	700mm	650mm	- 53mm	595mm	62mm
1315mm	700mm	650mm	- 48mm	600mm	62mm
1320mm	700mm	650mm	- 43mm	605mm	62mm
1325mm	700mm	650mm	- 38mm	610mm	62mm
1330mm	700mm	650mm	- 33mm	615mm	62mm
1335mm	700mm	650mm	- 28mm	620mm	62mm
1340mm	700mm	650mm	- 23mm	625mm	62mm

SPACINGS BASED ON THESE ASSUMPTIONS:

1. Fixed panel installed with Purity wall brackets which produces a 3mm silicone join gap. If wall channel is used, specified opening sizes overlaps, etc will change.
2. Edge of glass door must remain 10mm from wall. 10mm door bulb recommended to use for buffering or if not used, 10mm safety margin gap required.
3. When door is open, minimum 15mm gap is required from wall (for safety margin buffering).

***When using a 650mm wide fixed panel, it is important to purchase 1x slimline wall bracket separately (STAL-RWBS/STAL-RWBS-B/ STAL-RWBS-ORO/STAL-RWBS-NIKL) due to space restrictions between the rail fixing bracket and the wall.**

Images & drawings are not to scale

DOOR SMALLER THAN FIXED PANEL

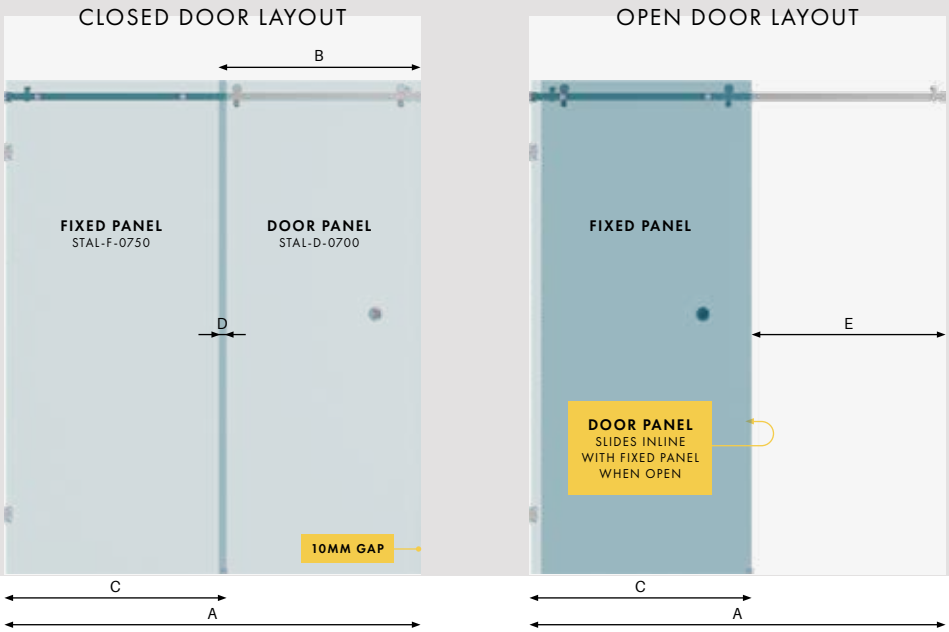

A Overall Width	B Door Width	C Fixed Panel Width	D Overlap With Closed Door	E Opening
1340mm	700mm	750mm	- 123mm	587mm
1345mm	700mm	750mm	- 118mm	592mm
1350mm	700mm	750mm	- 113mm	597mm
1355mm	700mm	750mm	- 108mm	602mm
1360mm	700mm	750mm	- 103mm	607mm
1365mm	700mm	750mm	- 98mm	612mm
1370mm	700mm	750mm	- 93mm	617mm
1375mm	700mm	750mm	- 88mm	622mm
1380mm	700mm	750mm	- 83mm	627mm
1385mm	700mm	750mm	- 78mm	632mm
1390mm	700mm	750mm	- 73mm	637mm
1395mm	700mm	750mm	- 68mm	642mm
1400mm	700mm	750mm	- 63mm	647mm
1405mm	700mm	750mm	- 58mm	652mm
1410mm	700mm	750mm	- 53mm	657mm
1415mm	700mm	750mm	- 48mm	662mm
1420mm	700mm	750mm	- 43mm	667mm
1425mm	700mm	750mm	- 38mm	672mm
1430mm	700mm	750mm	- 33mm	677mm
1435mm	700mm	750mm	- 28mm	682mm
1440mm	700mm	750mm	- 23mm	687mm

SPACINGS BASED ON THESE ASSUMPTIONS:

1. Fixed panel installed with Purity wall brackets which produces a 3mm silicone join gap. If wall channel is used, specified opening sizes overlaps, etc will change.
2. Edge of glass door must remain 10mm from wall. 10mm door bulb recommended to use for buffering or if not used, 10mm safety margin gap required.
3. When door is open, minimum 15mm gap is required from wall (for safety margin buffering).

DOOR WIDER THAN FIXED PANEL

CLOSED DOOR LAYOUT

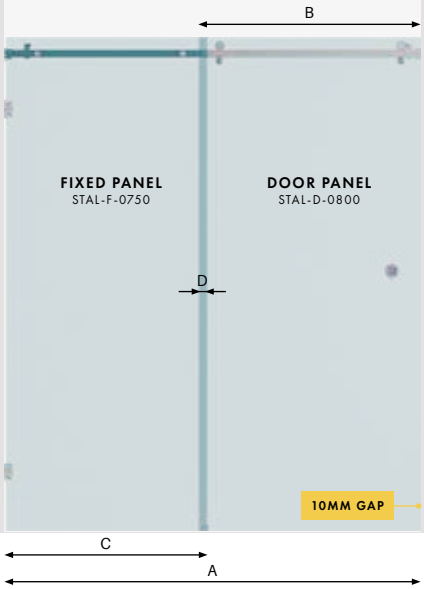

OPEN DOOR LAYOUT

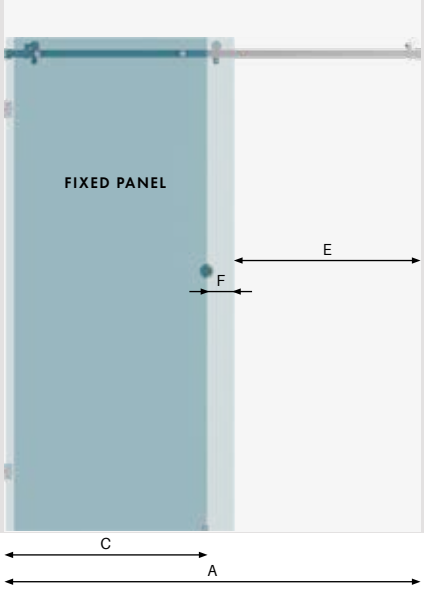

A Overall Width	B Door Width	C Fixed Panel Width	D Overlap With Closed Door	E Opening	F Panel Overlap When Door Open
1440mm	800mm	750mm	- 123mm	625mm	62mm
1445mm	800mm	750mm	- 118mm	630mm	62mm
1450mm	800mm	750mm	- 113mm	635mm	62mm
1455mm	800mm	750mm	- 108mm	640mm	62mm
1460mm	800mm	750mm	- 103mm	645mm	62mm
1465mm	800mm	750mm	- 98mm	650mm	62mm
1470mm	800mm	750mm	- 93mm	655mm	62mm
1475mm	800mm	750mm	- 88mm	660mm	62mm
1480mm	800mm	750mm	- 83mm	665mm	62mm
1485mm	800mm	750mm	- 78mm	670mm	62mm
1490mm	800mm	750mm	- 73mm	675mm	62mm
1495mm	800mm	750mm	- 68mm	680mm	62mm
1500mm	800mm	750mm	- 63mm	685mm	62mm
1505mm	800mm	750mm	- 58mm	690mm	62mm
1510mm	800mm	750mm	- 53mm	695mm	62mm
1515mm	800mm	750mm	- 48mm	700mm	62mm
1520mm	800mm	750mm	- 43mm	705mm	62mm
1525mm	800mm	750mm	- 38mm	710mm	62mm
1530mm	800mm	750mm	- 33mm	715mm	62mm
1535mm	800mm	750mm	- 28mm	720mm	62mm
1540mm	800mm	750mm	- 23mm	725mm	62mm

SPACINGS BASED ON THESE ASSUMPTIONS:

1. Fixed panel installed with Purity wall brackets which produces a 3mm silicone join gap. If wall channel is used, specified opening sizes overlaps, etc will change.
2. Edge of glass door must remain 10mm from wall. 10mm door bulb recommended to use for buffering or if not used, 10mm safety margin gap required.
3. When door is open, minimum 15mm gap is required from wall (for safety margin buffering).

Images & drawings are not to scale

DOOR SMALLER THAN FIXED PANEL

CLOSED DOOR LAYOUT

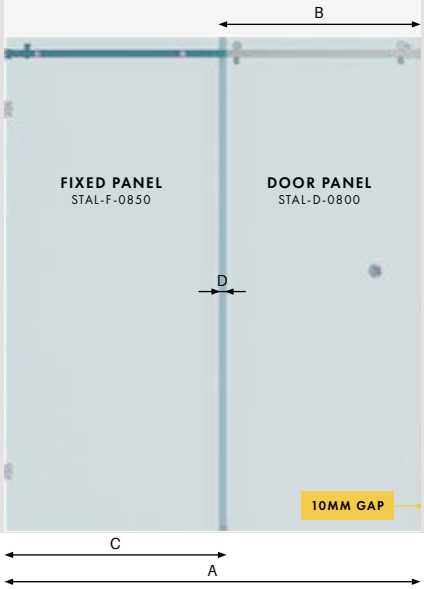

OPEN DOOR LAYOUT

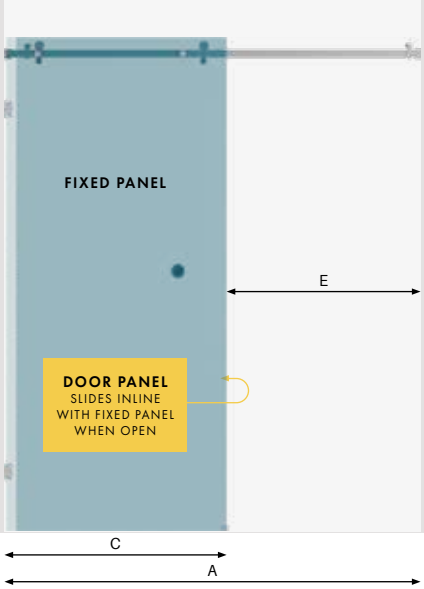

A Overall Width	B Door Width	C Fixed Panel Width	D Overlap With Closed Door	E Opening
1540mm	800mm	850mm	- 123mm	687mm
1545mm	800mm	850mm	- 118mm	692mm
1550mm	800mm	850mm	- 113mm	697mm
1555mm	800mm	850mm	- 108mm	702mm
1560mm	800mm	850mm	- 103mm	707mm
1565mm	800mm	850mm	- 98mm	712mm
1570mm	800mm	850mm	- 93mm	717mm
1575mm	800mm	850mm	- 88mm	722mm
1580mm	800mm	850mm	- 83mm	727mm
1585mm	800mm	850mm	- 78mm	732mm
1590mm	800mm	850mm	- 73mm	737mm
1595mm	800mm	850mm	- 68mm	742mm
1600mm	800mm	850mm	- 63mm	747mm
1605mm	800mm	850mm	- 58mm	752mm
1610mm	800mm	850mm	- 53mm	757mm
1615mm	800mm	850mm	- 48mm	762mm
1620mm	800mm	850mm	- 43mm	767mm
1625mm	800mm	850mm	- 38mm	772mm
1630mm	800mm	850mm	- 33mm	777mm
1635mm	800mm	850mm	- 28mm	782mm
1640mm	800mm	850mm	- 23mm	787mm

SPACINGS BASED ON THESE ASSUMPTIONS:

1. Fixed panel installed with Purity wall brackets which produces a 3mm silicone join gap. If wall channel is used, specified opening sizes overlaps, etc will change.
2. Edge of glass door must remain 10mm from wall. 10mm door bulb recommended to use for buffering or if not used, 10mm safety margin gap required.
3. When door is open, minimum 15mm gap is required from wall (for safety margin buffering).

DOOR WIDER THAN FIXED PANEL

CLOSED DOOR LAYOUT

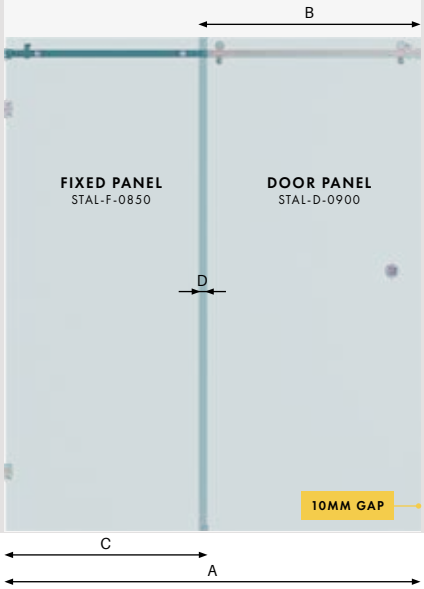

OPEN DOOR LAYOUT

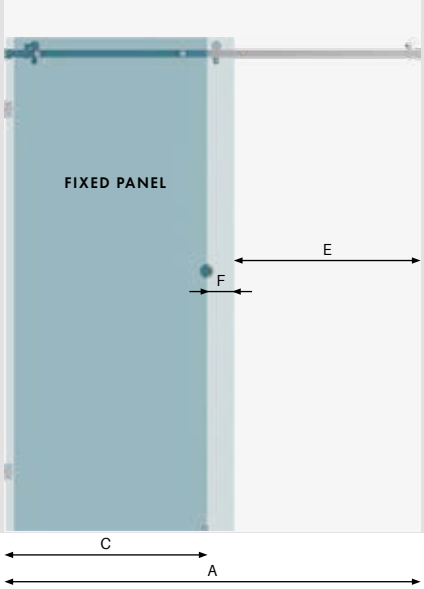

A Overall Width	B Door Width	C Fixed Panel Width	D Overlap With Closed Door	E Opening	F Panel Overlap When Door Open
1640mm	900mm	850mm	- 123mm	625mm	62mm
1645mm	900mm	850mm	- 118mm	630mm	62mm
1650mm	900mm	850mm	- 113mm	635mm	62mm
1655mm	900mm	850mm	- 108mm	640mm	62mm
1660mm	900mm	850mm	- 103mm	645mm	62mm
1665mm	900mm	850mm	- 98mm	650mm	62mm
1670mm	900mm	850mm	- 93mm	655mm	62mm
1675mm	900mm	850mm	- 88mm	660mm	62mm
1680mm	900mm	850mm	- 83mm	665mm	62mm
1685mm	900mm	850mm	- 78mm	670mm	62mm
1690mm	900mm	850mm	- 73mm	675mm	62mm
1695mm	900mm	850mm	- 68mm	680mm	62mm
1700mm	900mm	850mm	- 63mm	685mm	62mm
1705mm	900mm	850mm	- 58mm	690mm	62mm
1710mm	900mm	850mm	- 53mm	695mm	62mm
1715mm	900mm	850mm	- 48mm	700mm	62mm
1720mm	900mm	850mm	- 43mm	705mm	62mm
1725mm	900mm	850mm	- 38mm	710mm	62mm
1730mm	900mm	850mm	- 33mm	715mm	62mm
1735mm	900mm	850mm	- 28mm	720mm	62mm
1740mm	900mm	850mm	- 23mm	725mm	62mm

SPACINGS BASED ON THESE ASSUMPTIONS:

1. Fixed panel installed with Purity wall brackets which produces a 3mm silicone join gap. If wall channel is used, specified opening sizes overlaps, etc will change.
2. Edge of glass door must remain 10mm from wall. 10mm door bulb recommended to use for buffering or if not used, 10mm safety margin gap required.
3. When door is open, minimum 15mm gap is required from wall (for safety margin buffering).

Images & drawings are not to scale

DOOR SMALLER THAN FIXED PANEL

CLOSED DOOR LAYOUT

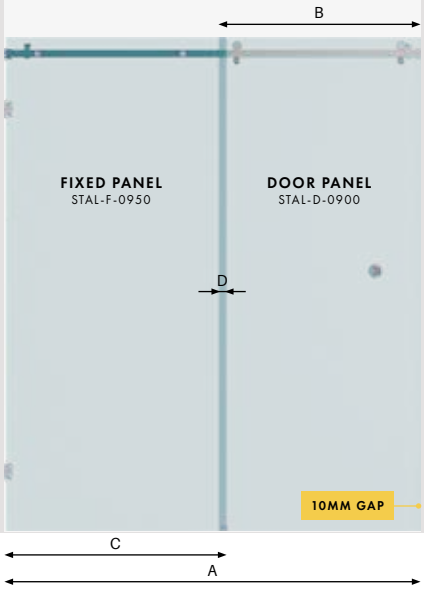

OPEN DOOR LAYOUT

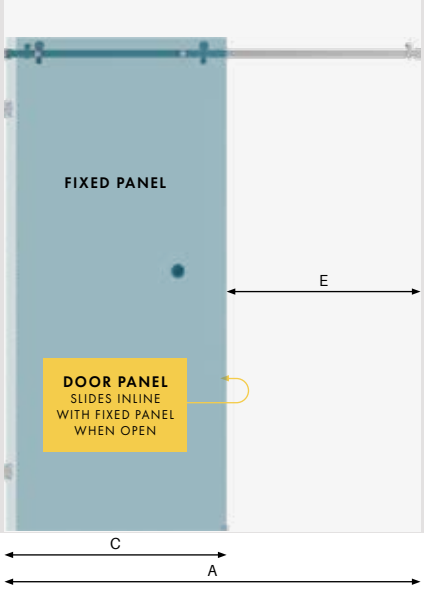

A Overall Width	B Door Width	C Fixed Panel Width	D Overlap With Closed Door	E Opening
1740mm	900mm	950mm	- 123mm	687mm
1745mm	900mm	950mm	- 118mm	692mm
1750mm	900mm	950mm	- 113mm	697mm
1755mm	900mm	950mm	- 108mm	702mm
1760mm	900mm	950mm	- 103mm	707mm
1765mm	900mm	950mm	- 98mm	712mm
1770mm	900mm	950mm	- 93mm	717mm
1775mm	900mm	950mm	- 88mm	722mm
1780mm	900mm	950mm	- 83mm	727mm
1785mm	900mm	950mm	- 78mm	732mm
1790mm	900mm	950mm	- 73mm	737mm
1795mm	900mm	950mm	- 68mm	742mm
1800mm	900mm	950mm	- 63mm	747mm
1805mm	900mm	950mm	- 58mm	752mm
1810mm	900mm	950mm	- 53mm	757mm
1815mm	900mm	950mm	- 48mm	762mm
1820mm	900mm	950mm	- 43mm	767mm
1825mm	900mm	950mm	- 38mm	772mm
1830mm	900mm	950mm	- 33mm	777mm
1835mm	900mm	950mm	- 28mm	782mm
1840mm	900mm	950mm	- 23mm	787mm

SPACINGS BASED ON THESE ASSUMPTIONS:

1. Fixed panel installed with Purity wall brackets which produces a 3mm silicone join gap. If wall channel is used, specified opening sizes overlaps, etc will change.
2. Edge of glass door must remain 10mm from wall. 10mm door bulb recommended to use for buffering or if not used, 10mm safety margin gap required.
3. When door is open, minimum 15mm gap is required from wall (for safety margin buffering).

DOOR WIDER THAN FIXED PANEL

CLOSED DOOR LAYOUT

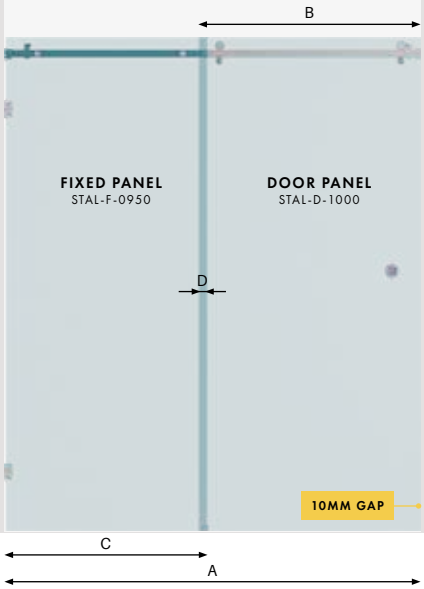

OPEN DOOR LAYOUT

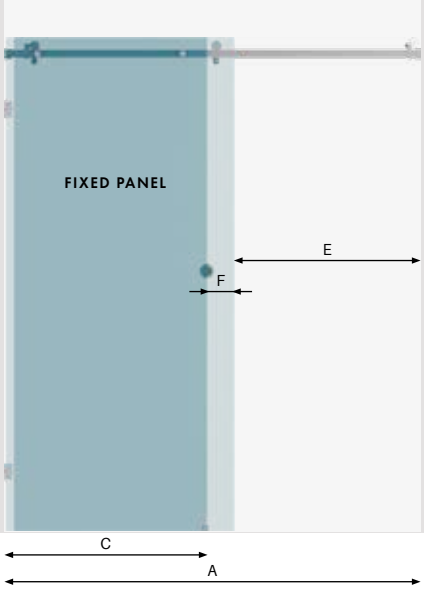

A Overall Width	B Door Width	C Fixed Panel Width	D Overlap With Closed Door	E Opening	F Panel Overlap When Door Open
1840mm	1000mm	950mm	- 123mm	625mm	62mm
1845mm	1000mm	950mm	- 118mm	630mm	62mm
1850mm	1000mm	950mm	- 113mm	635mm	62mm
1855mm	1000mm	950mm	- 108mm	640mm	62mm
1860mm	1000mm	950mm	- 103mm	645mm	62mm
1865mm	1000mm	950mm	- 98mm	650mm	62mm
1870mm	1000mm	950mm	- 93mm	655mm	62mm
1875mm	1000mm	950mm	- 88mm	660mm	62mm
1880mm	1000mm	950mm	- 83mm	665mm	62mm
1885mm	1000mm	950mm	- 78mm	670mm	62mm
1890mm	1000mm	950mm	- 73mm	675mm	62mm
1895mm	1000mm	950mm	- 68mm	680mm	62mm
1900mm	1000mm	950mm	- 63mm	685mm	62mm
1905mm	1000mm	950mm	- 58mm	690mm	62mm
1910mm	1000mm	950mm	- 53mm	695mm	62mm
1915mm	1000mm	950mm	- 48mm	700mm	62mm
1920mm	1000mm	950mm	- 43mm	705mm	62mm
1925mm	1000mm	950mm	- 38mm	710mm	62mm
1930mm	1000mm	950mm	- 33mm	715mm	62mm
1935mm	1000mm	950mm	- 28mm	720mm	62mm
1940mm	1000mm	950mm	- 23mm	725mm	62mm

SPACINGS BASED ON THESE ASSUMPTIONS:

1. Fixed panel installed with Purity wall brackets which produces a 3mm silicone join gap. If wall channel is used, specified opening sizes overlaps, etc will change.
2. Edge of glass door must remain 10mm from wall. 10mm door bulb recommended to use for buffering or if not used, 10mm safety margin gap required.
3. When door is open, minimum 15mm gap is required from wall (for safety margin buffering).

Images & drawings are not to scale

STÄL INSTALLATION GUIDE

TOOLS REQUIRED

- Cordless drill
- Ø8mm masonry drill bit
- Hacksaw
- Screwdriver
- Pencil
- Tape measure
- Level
- Silicone gun

CAUTION

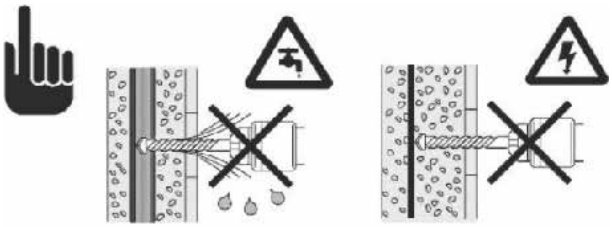

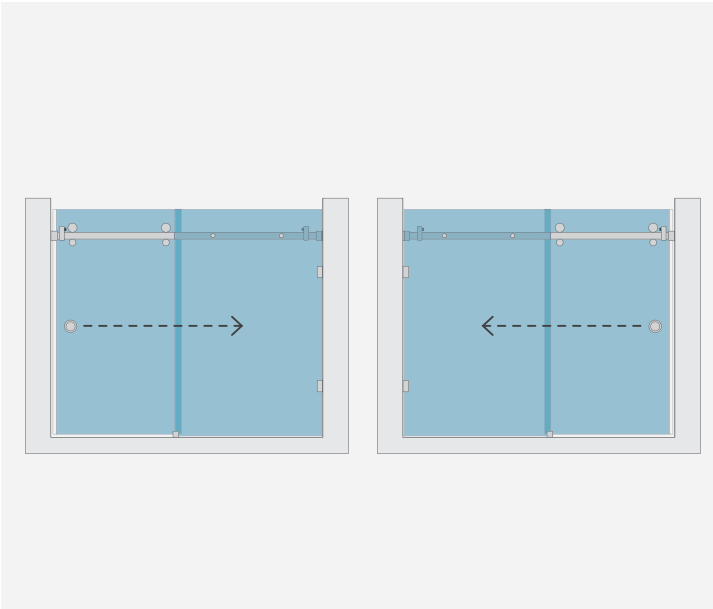

STEP 1

Select left or right handing of door panel.

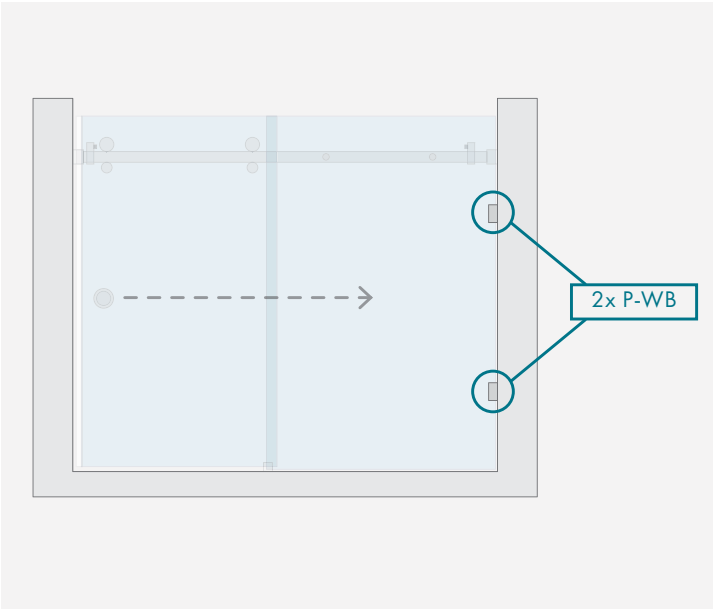

STEP 2

Fit the two fixed panel wall brackets (P-WB) to the opposite wall to the door opening.

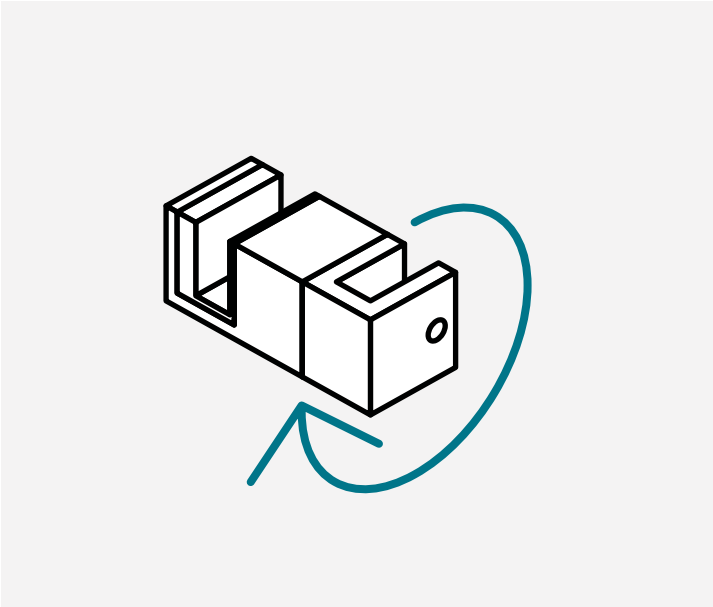

STEP 3

Rotate the floor guide to suit left or right handing door opening.

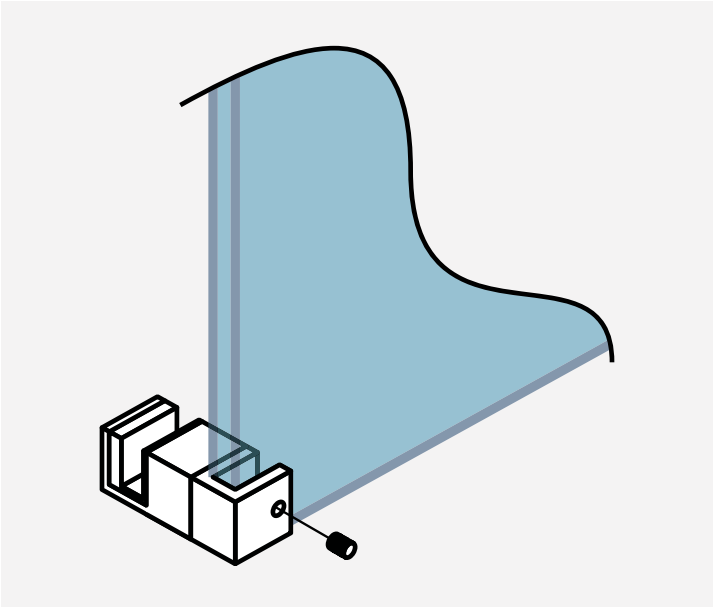

STEP 4

Using the grub screw, attach the floor guide to the bottom leading corner of the fixed panel.

STÄL INSTALLATION GUIDE

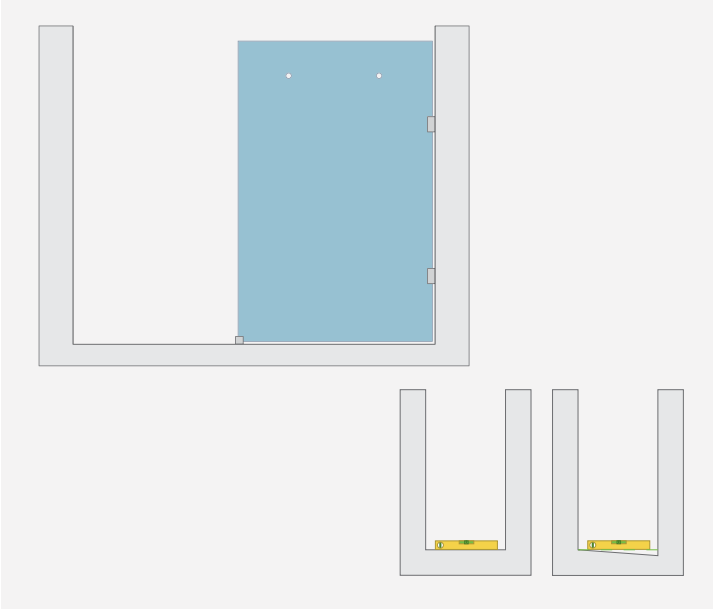

STEP 5

Fit fixed panel to wall brackets. NOTE: Check floor level. If floor is not level, fit glass ensuring it is level to the highest side.

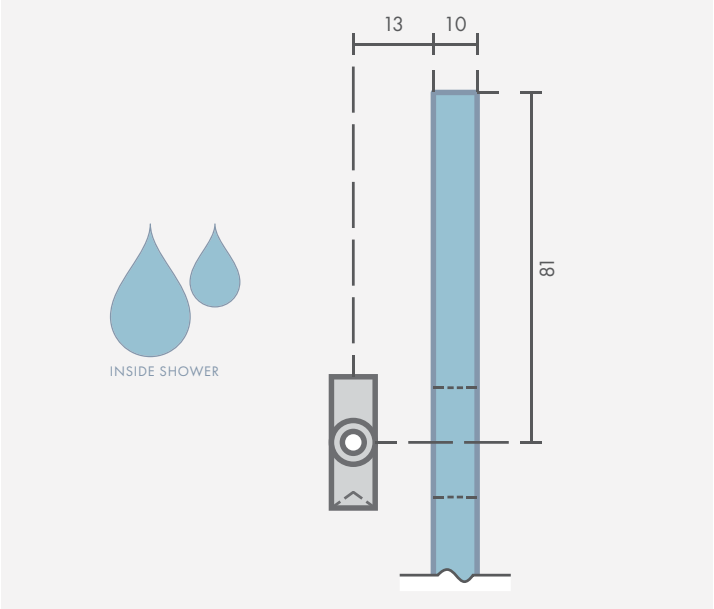

STEP 6

Fit the internal block of the first wall bracket inline with the fixed panel top holes.

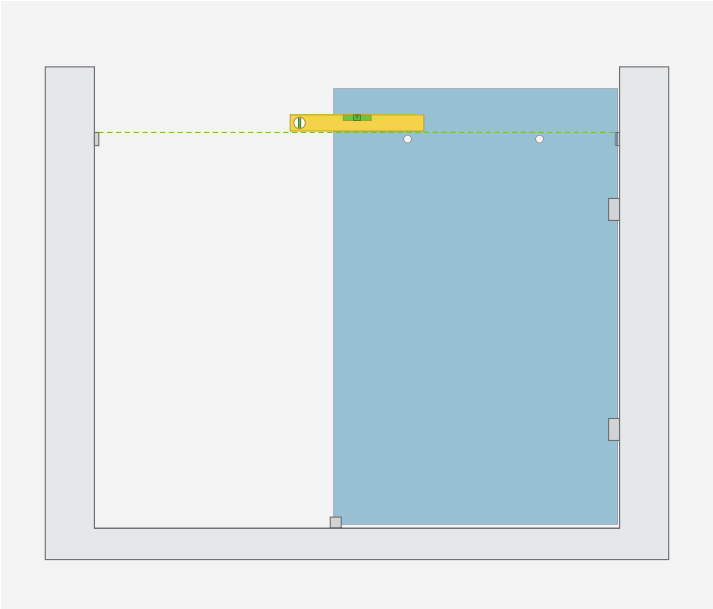

STEP 7

Fit the internal block of the second wall bracket to opposite wall ensuring it is level with the first block.

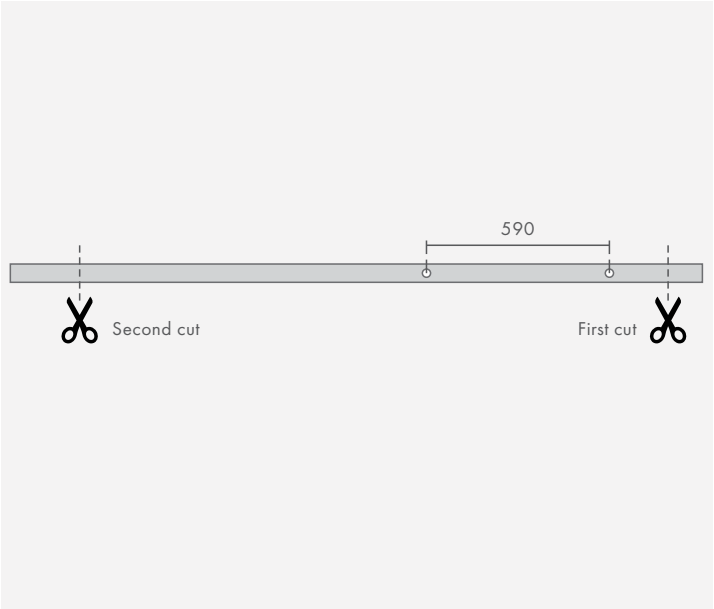

STEP 8

Cut both ends of rail to suit width between wall bracket blocks.
NOTE: Cut fixed panel end first ensuring the holes in rail line up with the holes in glass fixed panel.

STÄL INSTALLATION GUIDE

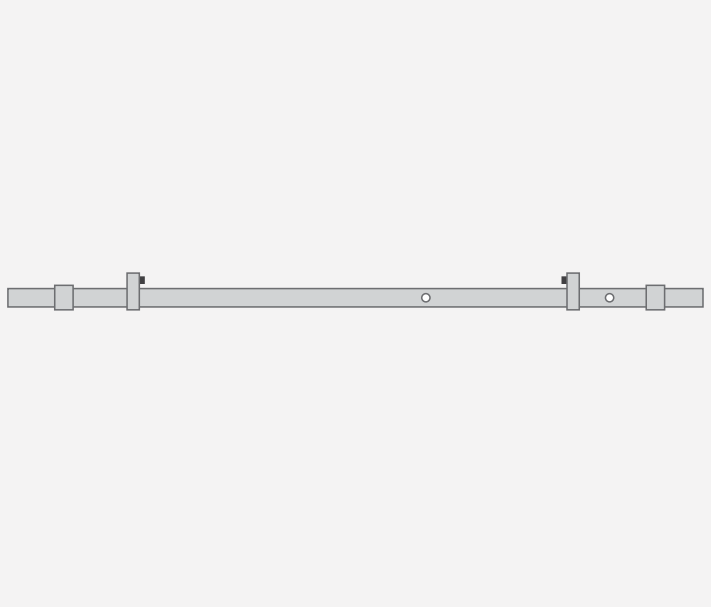

STEP 9

Slide 2x stoppers and 2x wall bracket sleeves onto rail before fitting to blocks. NOTE: Select the slimline rail wall bracket on the fixed panel side if using a 650mm W fixed panel.

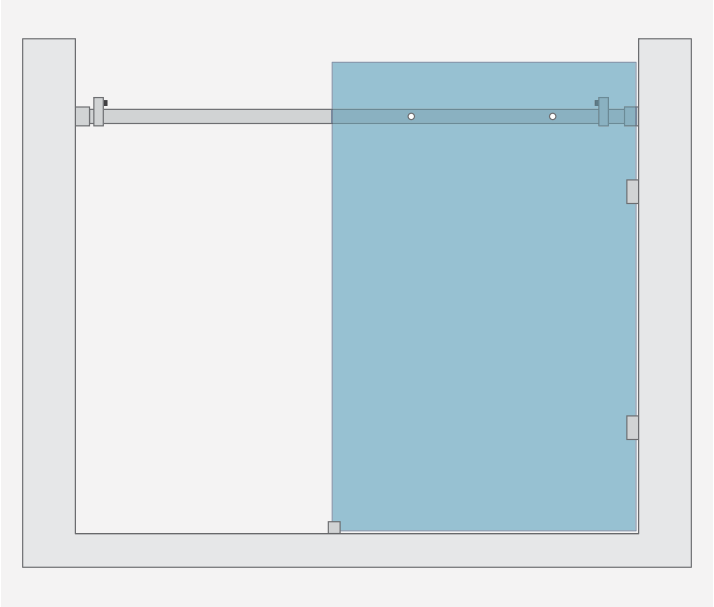

STEP 10

Attach rail to wall brackets by sliding wall bracket outer sleeves over the wall blocks and secure with grub screws.

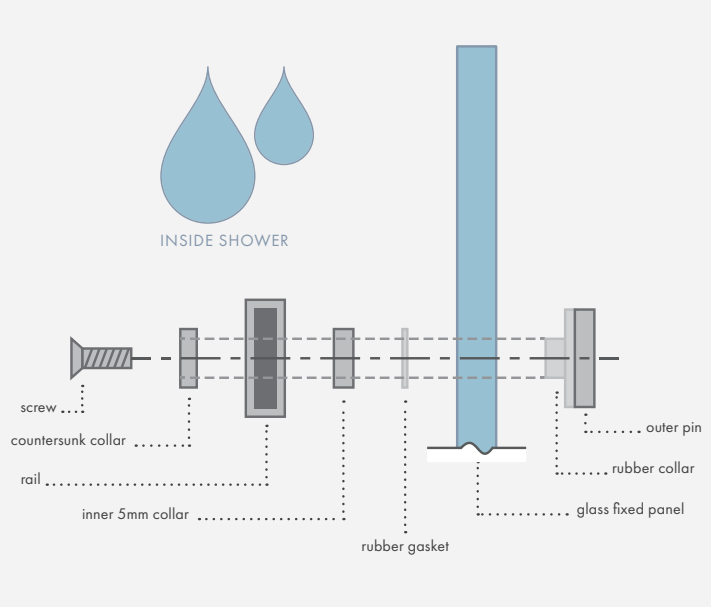

STEP 11

Attach fixed rail connectors to connect rail to fixed glass panel.

IMPORTANT
Apply Ultraloc 3242 or equivalent to screw thread and allow 24 hours for full cure. Do not use shower during this time. Ultraloc 3242 aids in prevention of the chance of screw loosening resulting in rail and glass door dropping.

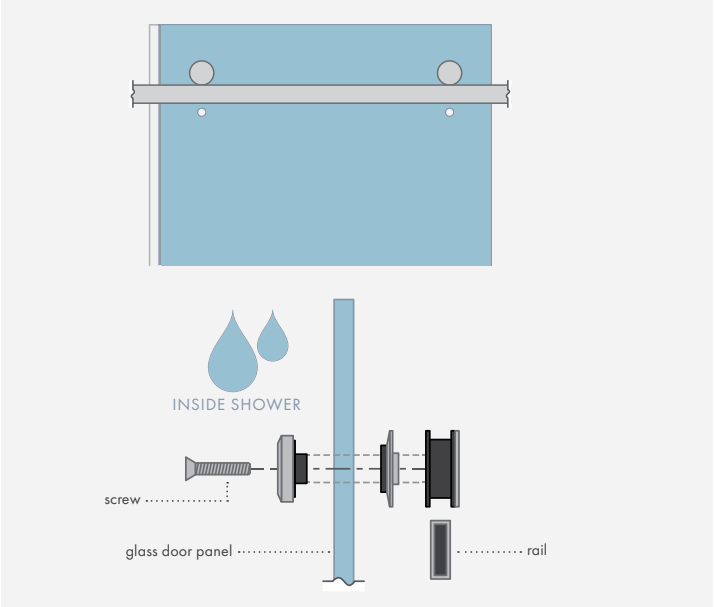

STEP 12

Fit 2x rollers to door facing out. Fit door bumper to leading door edge. Hang door on rail while fitting bottom edge into floor guide and adjust level.

IMPORTANT
Apply Ultraloc 3242 or equivalent to screw thread and allow 24 hours for full cure. Do not use shower during this time. Ultraloc 3242 aids in prevention of the chance of screw loosening resulting in glass door dropping.

STÄL INSTALLATION GUIDE

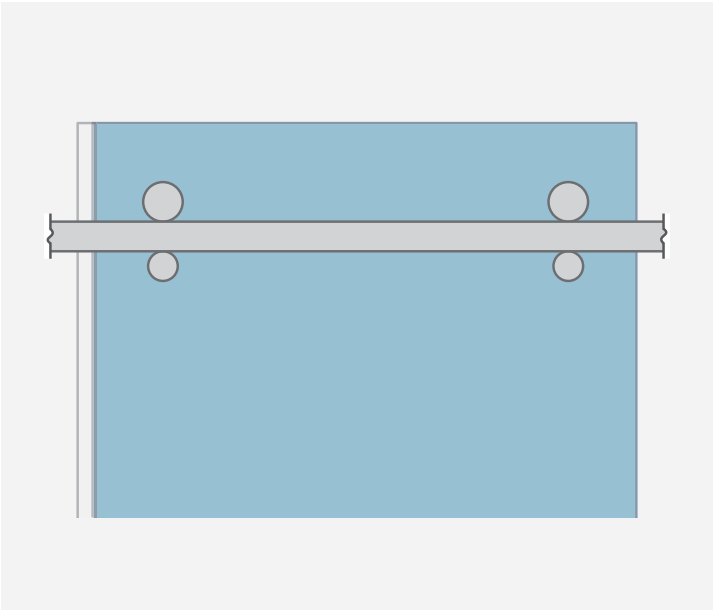

STEP 13

Fit door stabiliser guides to door and adjust to prevent door from lifting off rail.

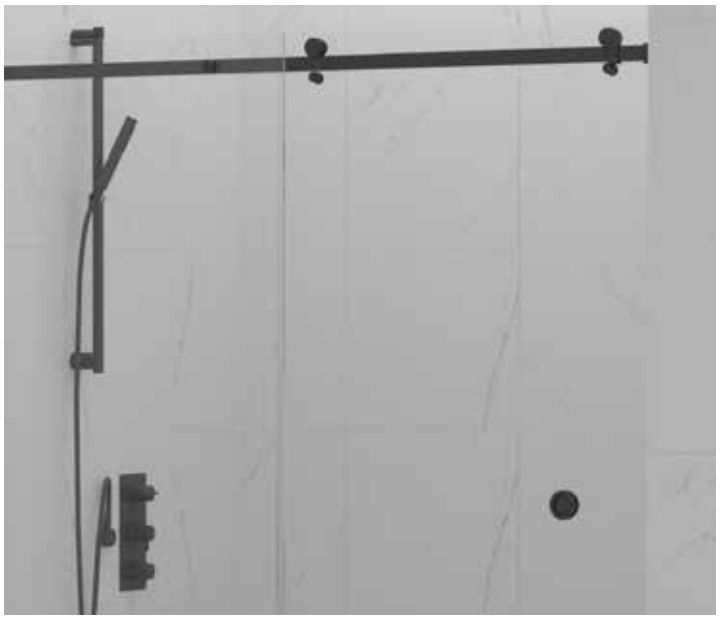

STEP 14

Fit recessed handle to door.

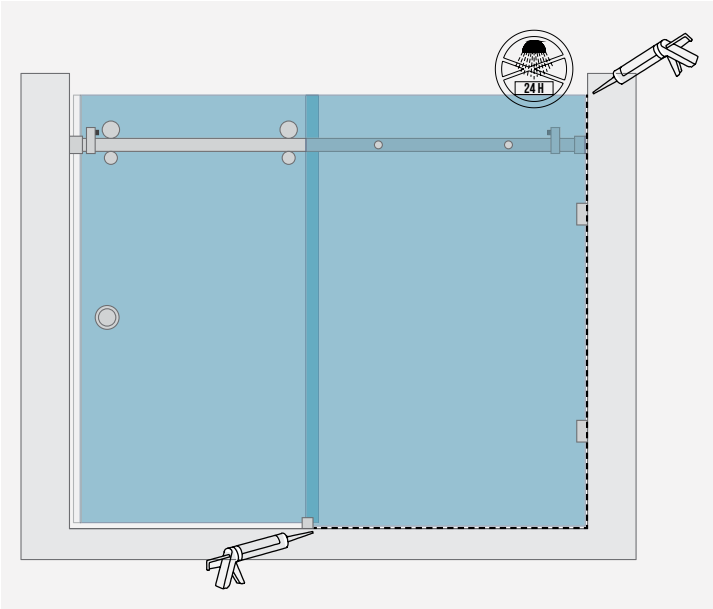

STEP 15

Silicone fixed panel into place.

ONGOING MAINTENANCE & CARE

Periodic checks (quarterly) must be undertaken to check the installation integrity. Ensure glass door continues to run true and is not touching the ground or wall. Check fixing screws through rollers are tight In high use applications particularly, ongoing maintenance and review is critical.

Images & drawings are not to scale

STÄL INSTALLATION GUIDE: 90° RETURN

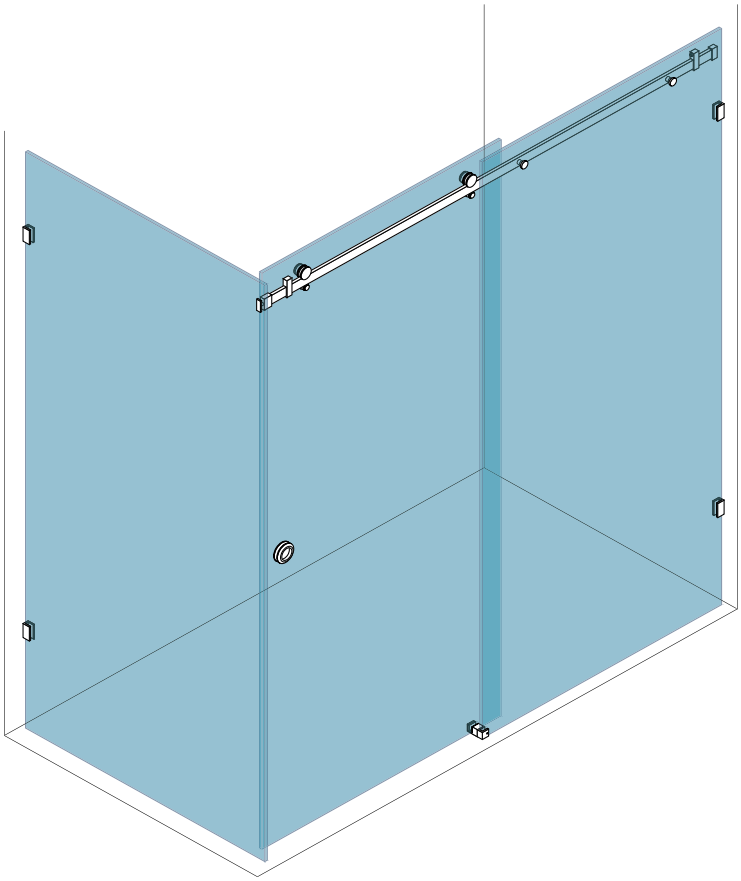

RETURN COMPONENTS (IF APPLICABLE)

WALL BRACKET x2

- Chrome plated solid brass
- Use to install fixed glass panels to wall

Code: P-WB

90° GLASS BRACKET x1

- Polish finish SS304
- Required when installing with a glass return panel

Code: STAL-90J

BOSTIK 6S SILICONE

- 300g tube
- Translucent finish
- High performance neutral cure silicone sealant with mould inhibitor

Code: P-S-6S

RETURN PANEL MEASURING TIPS

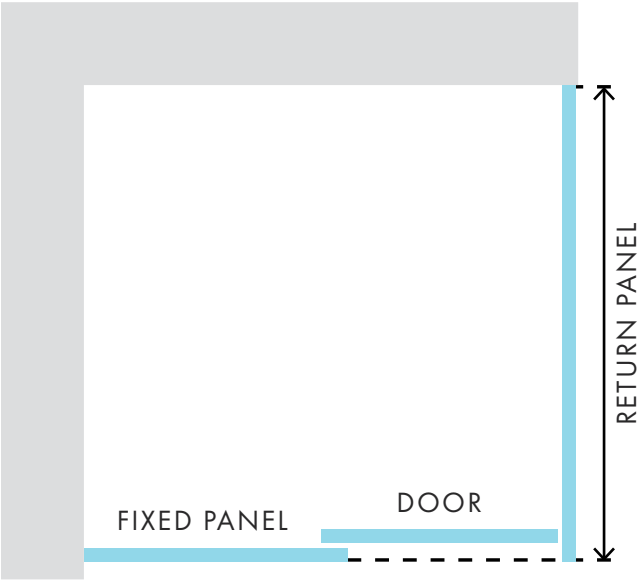

- Return panel width measured from wall to front face of front/fixed inline panel
- If using a wall bracket to affix return panel to wall, a deduction needs to be made to the glass return panel width to allow for bracket gap (commonly 3mm to 5mm)

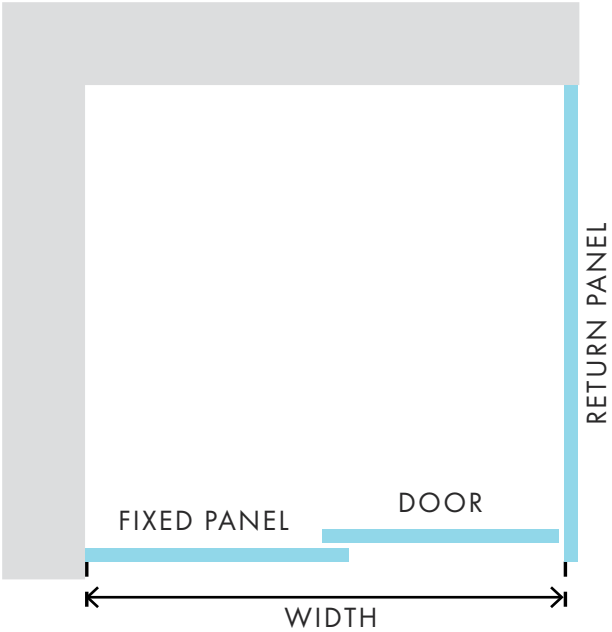

- When measuring "W" for a configuration with a return panel, width is measured from wall to inside edge of 10mm thick return panel

Images & drawings are not to scale

STÄL INSTALLATION GUIDE: 90° RETURN

TOOLS REQUIRED

- Cordless drill
- Ø8mm masonry drill bit
- Hacksaw
- Screwdriver
- Pencil
- Tape measure
- Level
- Silicone gun

CAUTION

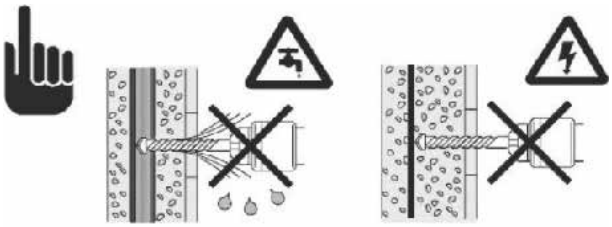

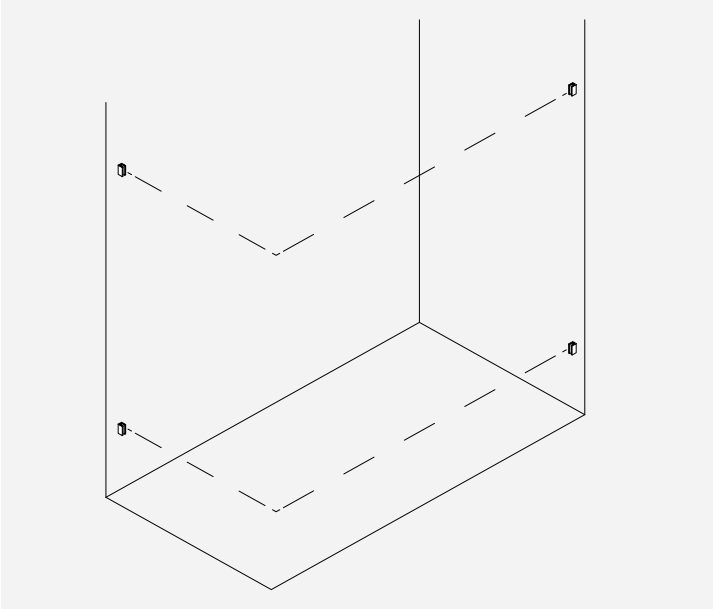

STEP 1

Fit return panel wall brackets at the same height as fixed panel wall brackets.

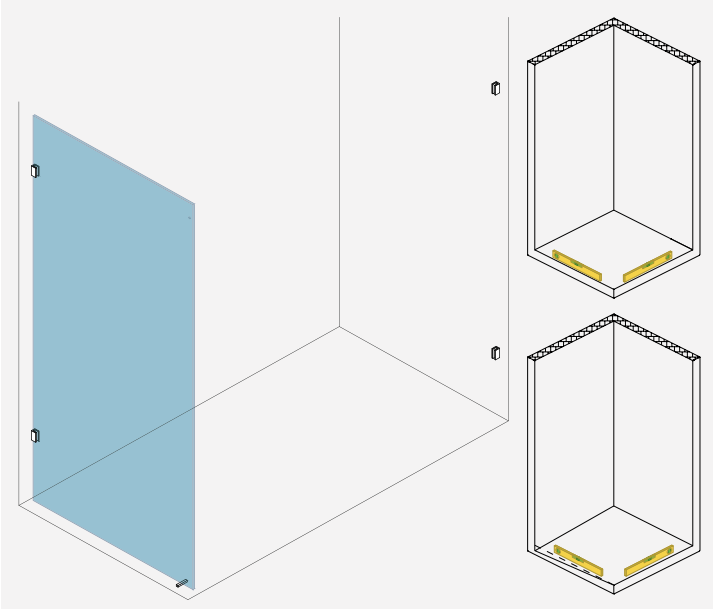

STEP 2

Fit return panel to wall brackets and pack leading edge to avoid glass on tile. NOTE: Check floor level. If floor is not level, fit glass ensuring it is level to the highest side.

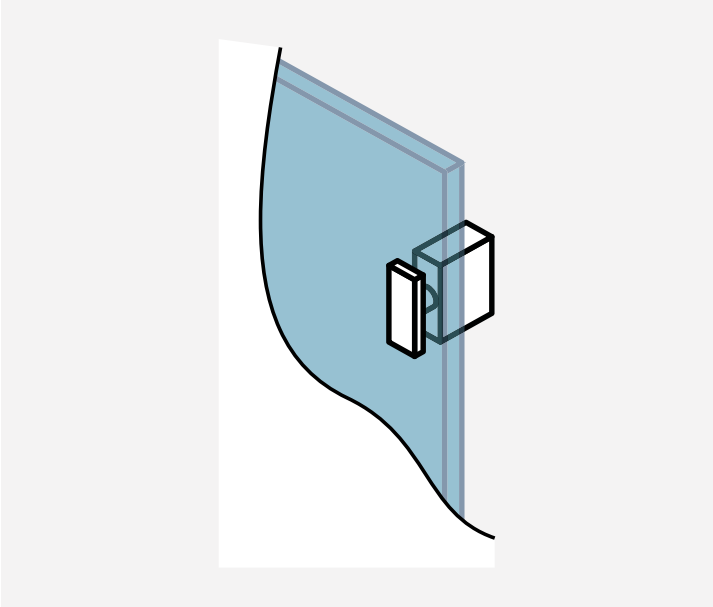

STEP 3

Fit 90° bracket to return panel.

See inline installation steps 1-14

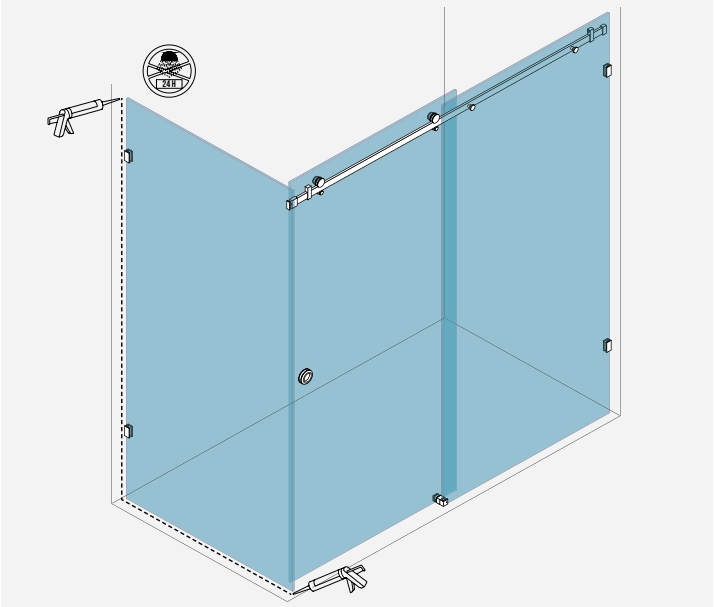

STEP 4

Silicone return panel.

Images & drawings are not to scale

STÄL INSTALLATION IMPORTANT NOTE

IMPORTANT INSTALLATION NOTE – DOOR ROLLERS

Door rollers are assembled as per below configuration

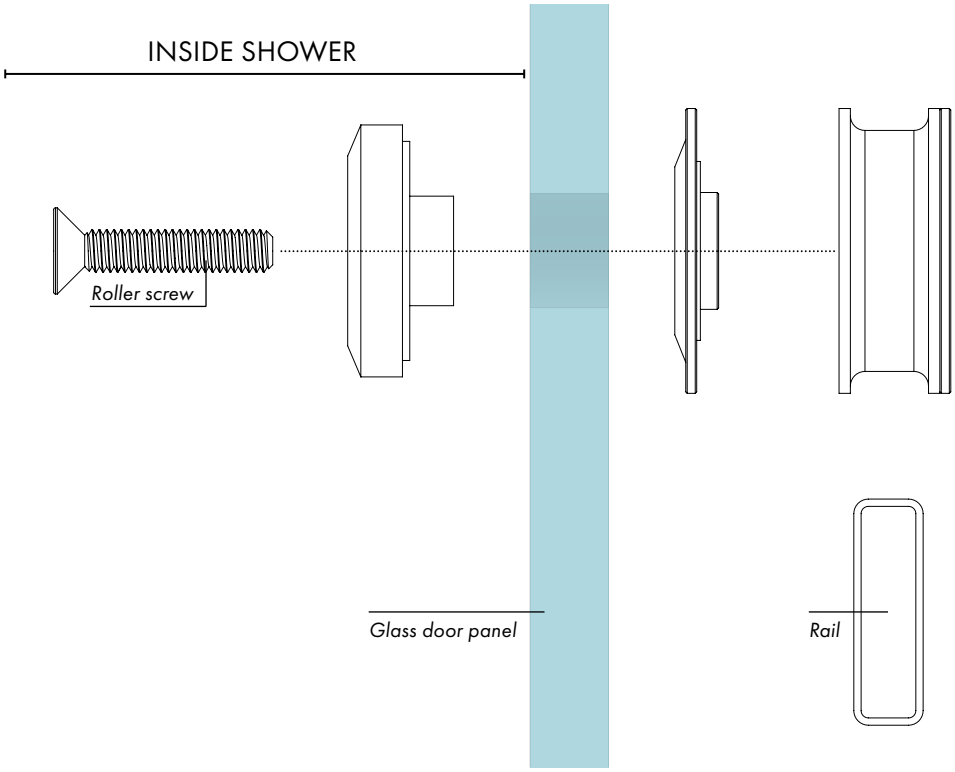

IMPORTANT

Screw must be tightly affixed. We also recommend use of Ultraloc 3242 or equivalent on roller screw thread.

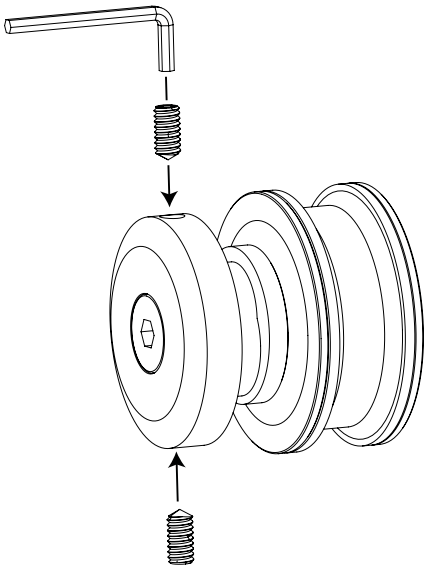

ADDED FEATURE TO ENSURE SCREW REMAINS SECURELY TIGHTENED

Once Roller Screw is secured tight, use allen key provided and tighten the 2 x grub screws located in the cap.

NOTE: *grub screws are already in the cap and simply require tightening – drawing for illustration purposes only.*

TRILOGY

AUSTRALIA'S LEADING PIVOT DOOR SHOWER SCREEN SYSTEM

EXTREMELY COST EFFECTIVE | HUGE WIDTH ADJUSTABILITY | LARGE RANGE OF SIZES | EASY TO INSTALL

TRILOGY SERIES OVERVIEW

The TRILOGY showerscreen system, available in bright polish or matt black frame finish, is a stylish and affordable semi-frameless solution for any bathroom. The overlapping pivot door system enables incredible width adjustability. This flexibility of installation does not compromise quality or aesthetic appeal.

Adjustability having regard to both width and wall squareness is the key to the TRILOGY Series allowing ease of install and overcomes the traditional problem of exact sizes needed for a specific shower openings.

KEY FEATURES

- Cost effective
- Bright polish or matt black frame finish
- Inline and return panels are pre-assembled for fast installation
- 1950mm high
- Achieve widths from 795mm to 1550mm with Inline range* (ie fixed panel and pivot door)
- Return panels in 3 popular widths (or frame extrusion kits available to make any width)
- U channel installation against walls overcome out of square issues
- Robust pivot door system featuring superior water leakage prevention with "L" shape bottom rail and magnetic door close
- Sill-Less Kit available to satisfy ABCB Livable Housing Design requirements

*Cannot achieve between 1370mm and 1400mm for inline configurations
*Cannot achieve between 1382mm and 1388mm for inline front & return panel configurations

The Trilogy system is a robust, easy to install pivot door showerscreen that is stylish while providing superior protection against water escape.

FACTORY FEATURES

We are committed to supplying the trade with the finest quality goods at Australia's most competitive prices. Production of the TRILOGY series is

Comprehensive internal carton packing to minimise transport and storage damage

Carton cardboard tested for strength and breakage points. Thick cardboard is used for long term storage safety

In-house salt spray testing – tests aluminium extrusion for durability of coating

TRILOGY SERIES SYSTEM OVERVIEW

1 Grade 'A' toughened glass – AS/NZS2208 compliant

Door & return panel 6mm clear toughened; fixed panel 5mm clear toughened – Silk screen compliance logo on glass

2 Pivot hinges – High quality

Stylish square shape; smooth function and minimal friction for ease of operation

Pivot door allows for overlap of fixed panel = water seal

3 Magnetic closure & water seals

Full length magnetic door seal for rattle free closure and provides enhanced water seal

Bottom door seals also included

4 Frameless door with round knob

Modern frameless 6mm clear toughened door

Solid door knob for durability (not chromed plastic)

5 Slimline strong aluminium frame

Frame with minimalist low profile framing system

'L' shape extrusion profile at door base minimises water escape potential

6 Fully reversible door – left or right opening

Simply flip and rotate pre-assembled fixed panel with door to suit left or right opening – so easy!

7 U channels allow flexibility for installation

Slimline profile U channels allow installation for out of square wall situations

Additionally U channels allow 20mm extra width adjustment

8 Install on tiles or showerbases

9 Return panel install is so easy

Simply slide the innovative 90 degree adapter into inline panel

Then insert return panel to complete!

Adapter provided with every return panel

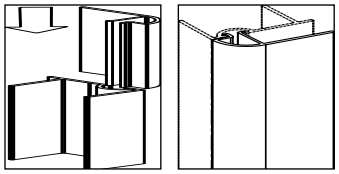

10 Easy telescopic adjustment: WIDTH ADJUSTABLE

Innovative design allows extrusion to telescopically move in & out for door width adjustment

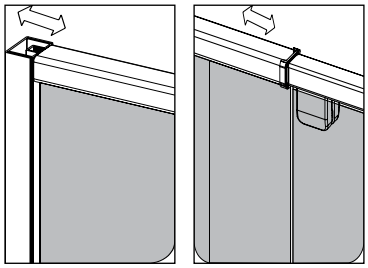

Images & drawings are not to scale

TRILOGY SERIES INLINE CONFIGURATION

INLINE CONFIGURATION

IDEAL BETWEEN WALL OPENINGS

7 Sizes available:

800mm wide x 1950mm high
850mm wide x 1950mm high
900mm wide x 1950mm high
1050mm wide x 1950mm high
1200mm wide x 1950mm high
1350mm wide x 1950mm high
1500mm wide x 1950mm high

Complete kit consists of:

- 1x door panel – 6mm clear toughened glass
- 1x fixed semi-framed panel – 5mm clear toughened glass
- (Pivot door and fixed panel pre-assembled with bright silver or matt black aluminium slimline frame)

General Inline Panel Specifications

Code	W	A	B	C	D	E
TSC-0800-IA/TSC-0800-IA-BLK	795-850	517	655	193	5	1871
TSC-0850-IA/TSC-0850-IA-BLK	845-900	567	704	193	5	1871
TSC-0900-IA/TSC-0900-IA-BLK	885-990	567	754	233	5	1871
TSC-1050-IA/TSC-1050-IA-BLK	985-1090	567	754	333	5	1871
TSC-1200-IA/TSC-1200-IA-BLK	1085-1230	567	794	433	5	1871
TSC-1350-IA/TSC-1350-IA-BLK	1225-1370	567	794	573	5	1871
TSC-1500-IA/TSC-1500-IA-BLK	1400-1550	567	794	753	5	1871

*Measurements in MM

TIP: Minimum wall to wall measurements (W) allows for fitting the inline front to installed wall channels

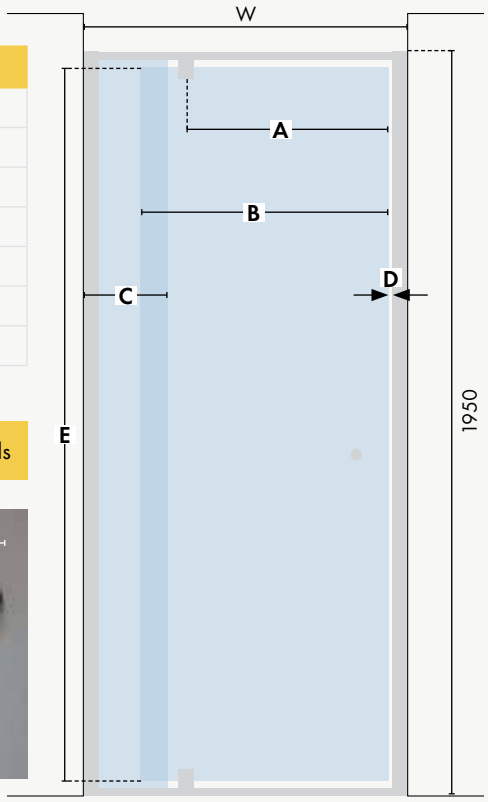

STEP 1

STEP 2

Images & drawings are not to scale

TRILOGY SERIES INLINE PANELS

INLINE 800
Pivot door with fixed panel
800mm wide x 1950mm high

Bright silver or matt black finish

Order Code: **TSC-0800-IA (Bright silver)**
TSC-0800-IA-BLK (Matt black)

- Pivot door with fixed panel
- Bright silver or matt black finish
- Complete flat pack
- Easily width adjustable with telescopic extrusion design

TOP VIEW

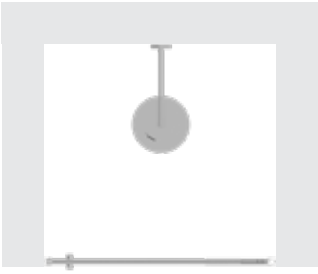

795 – 850mm
ADJUSTABLE

800mm series actual door size is 653mm wide x 1871mm high

Fixed/infill glass panel size is 180mm wide x 1911mm high

INLINE 850
Pivot door with fixed panel
850mm wide x 1950mm high

Bright silver or matt black finish

Order Code: **TSC-0850-IA (Bright silver)**
TSC-0850-IA-BLK (Matt black)

- Pivot door with fixed panel
- Bright silver or matt black finish
- Complete flat pack
- Easily width adjustable with telescopic extrusion design

TOP VIEW

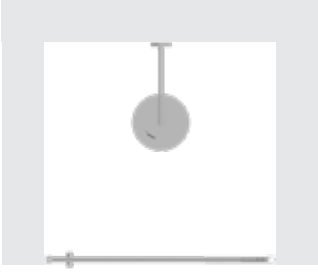

845 – 900mm
ADJUSTABLE

850mm series actual door size is 702mm wide x 1871mm high

Fixed/infill glass panel size is 180mm wide x 1911mm

INLINE 900
Pivot door with fixed panel
900mm wide x 1950mm high

Bright silver or matt black finish

Order Code: **TSC-0900-IA (Bright silver)**
TSC-0900-IA-BLK (Matt black)

- Pivot door with fixed panel
- Bright silver or matt black finish
- Complete flat pack
- Easily width adjustable with telescopic extrusion design

TOP VIEW

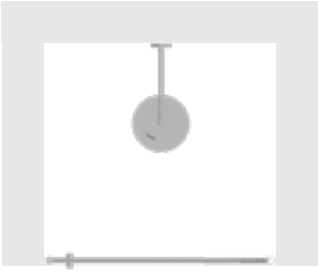

885-990mm
ADJUSTABLE

900mm series actual door size is 752mm wide x 1871mm high

Fixed/infill glass panel size is 220mm wide x 1911mm

Images & drawings are not to scale

TRILOGY SERIES INLINE PANELS

INLINE 1050
Pivot door with fixed panel
1050mm wide x 1950mm high

Bright silver or matt black finish

Order Code: **TSC-1050-IA (Bright silver)**
TSC-1050-IA-BLK (Matt black)

- Pivot door with fixed panel
- Bright silver or matt black finish
- Complete flat pack
- Easily width adjustable with telescopic extrusion design

TOP VIEW

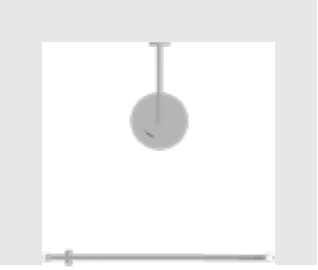

985-1090mm
ADJUSTABLE

1050mm series actual door size is 752mm wide x 1871mm high

Fixed/infill glass panel size is 320mm wide x 1911mm

INLINE 1200
Pivot door with fixed panel
1200mm wide x 1950mm high

Bright silver or matt black finish

Order Code: **TSC-1200-IA (Bright silver)**
TSC-1200-IA-BLK (Matt black)

- Pivot door with fixed panel
- Bright silver or matt black finish
- Complete flat pack
- Easily width adjustable with telescopic extrusion design

TOP VIEW

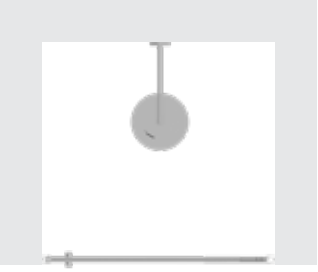

1085-1230mm
ADJUSTABLE

1200mm series actual door size is 792mm wide x 1871mm high

Fixed/infill glass panel size is 420mm wide x 1911mm

INLINE 1350
Pivot door with fixed panel
1350mm wide x 1950mm high

Bright silver or matt black finish

Order Code: **TSC-1350-IA (Bright silver)**
TSC-1350-IA-BLK (Matt black)

- Pivot door with fixed panel
- Bright silver or matt black finish
- Complete flat pack
- Easily width adjustable with telescopic extrusion design

TOP VIEW

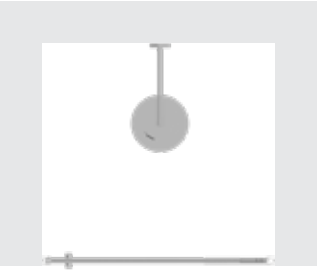

1225-1370mm
ADJUSTABLE

1350mm series actual door size is 792mm wide x 1871mm high

Fixed/infill glass panel size is 560mm wide x 1911mm

Images & drawings are not to scale

TRILOGY SERIES INLINE PANELS

INLINE 1500
Pivot door with fixed panel
1500mm wide x 1950mm high

Bright silver or matt black finish

Order Code: **TSC-1500-IA (Bright silver)**
TSC-1500-IA-BLK (Matt black)

- Pivot door with fixed panel
- Bright silver or matt black finish
- Complete flat pack
- Easily width adjustable with telescopic extrusion design

TOP VIEW

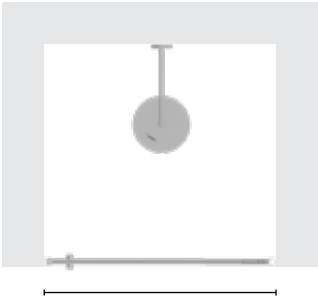

1400-1550mm
ADJUSTABLE

1500mm series actual door size is 792mm wide x 1871mm high

Fixed/infill glass panel size is 740mm wide x 1911mm

SILL-LESS SHOWER KIT

Bright silver or matt black finish

Order Code: **TSC-SL-KIT (Bright silver)**
TSC-SL-KIT-BLK (Matt black)

- Optional extra compatible with all current Trilogy shower screens
- Enables Hobless Step free shower entry
- Satisfies ABCB Livable Housing Design requirements
- Kit includes 2 x End Caps, 1 x door seal, 1 x floor threshold

Download the Sill-Less Shower Kit Fabrication Overview

TRILOGY SERIES RETURN CONFIGURATION

RETURN PANEL ALLOWS FOR L SHAPE CONFIGURATION

SIMPLY PURCHASE OPTIONAL EXTRA RETURN PANEL TO EASILY SLOT INTO INLINE PANEL

3 Returns available:

890mm, 910mm, 1010mm wide x 1950mm high

Return panel kit consists of:

- 1x glass panel – 6mm clear toughened glass (Glass pre-assembled with silver frame or matt black frame)
- 1 x 90 degree adapter included which inserts into inline panel
- 1 x U Channel – install against wall

850mm return:
adjustable 830 – 850mm

890mm return:
adjustable 870 – 890mm

910mm return:
adjustable width 890 – 910mm

1010mm return:
adjustable width 990 – 1010mm

L SHAPE WIDTH ADJUSTMENT GUIDE

800MM SERIES

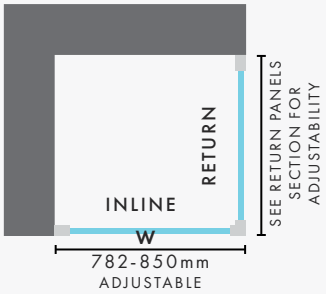

850MM SERIES

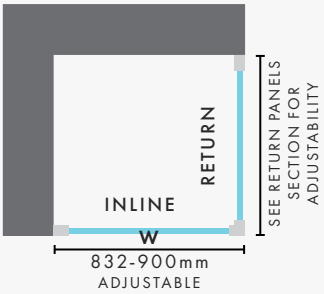

900MM SERIES

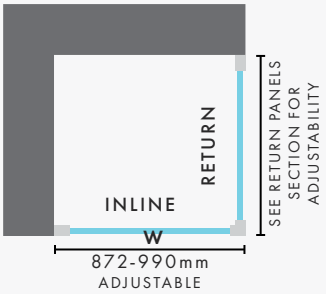

1050MM SERIES

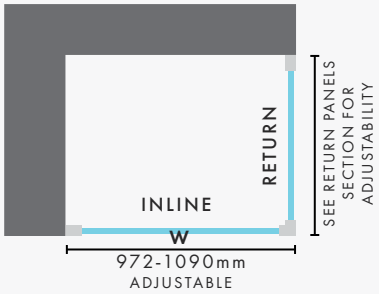

1200MM SERIES

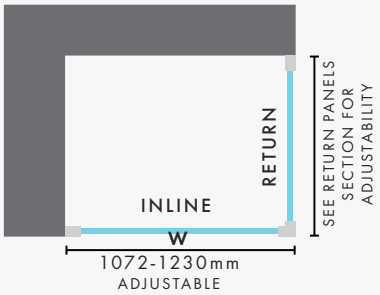

1350MM SERIES

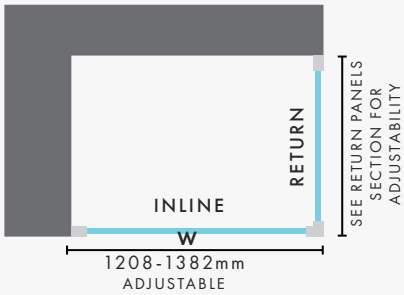

1500MM SERIES

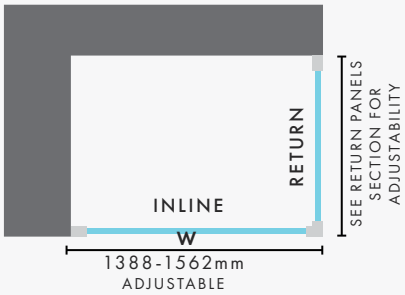

W = Wall to the outer of the 90 degree adaptor

TRILOGY SERIES RETURN PANELS

RETURN 850
Fully framed return panel
850mm wide x 1950mm high

Bright silver or matt black

Order Code: **TSCR-0850-R (Bright silver)**
TSCR-0850-R-BLK (Matt black)

- Fixed return panel
- Bright silver or matt black finish
- Complete flat pack
- Easily width adjustable
- U channel install to wall for ease of install & overcoming potential out of square wall issues

TOP VIEW

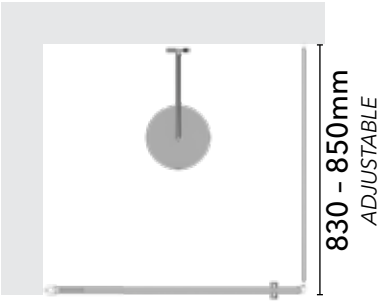

RETURN 890
Fully framed return panel
890mm wide x 1950mm high

Bright silver or matt black

Order Code: **TSCR-0890-R (Bright silver)**
TSCR-0890-R-BLK (Matt black)

- Fixed return panel
- Bright silver or matt black finish
- Complete flat pack
- Easily width adjustable
- U channel install to wall for ease of install & overcoming potential out of square wall issues

TOP VIEW

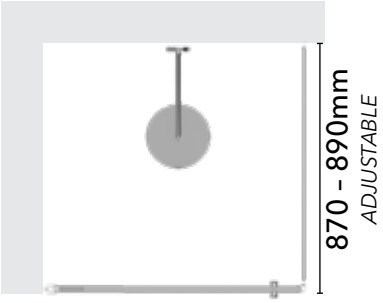

RETURN 910
Fully framed return panel
910mm wide x 1950mm high

Bright silver or matt black finish

Order Code: **TSCR-0910-R (Bright silver)**
TSCR-0910-R-BLK (Matt black)

- Fixed return panel
- Bright silver or matt black finish
- Complete flat pack
- Easily width adjustable
- U channel install to wall for ease of install & overcoming potential out of square wall issues

TOP VIEW

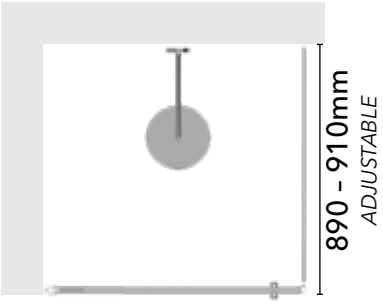

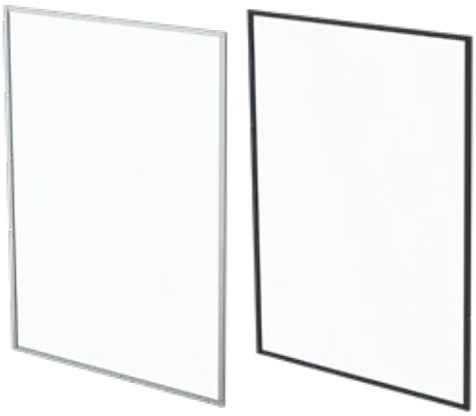

RETURN 1010
Fully framed return panel
1010mm wide x 1950mm high

Bright silver or matt black

Order Code: **TSCR-1010-R (Bright silver)**
TSCR-1010-R-BLK (Matt black)

- Fixed return panel
- Bright silver or matt black finish
- Complete flat pack
- Easily width adjustable
- U channel install to wall for ease of install & overcoming potential out of square wall issues

TOP VIEW

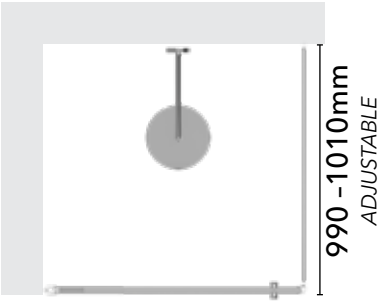

Images & drawings are not to scale

TRILOGY SERIES RETURN KITS

For custom sized RETURN panels, complete kits are available in bright polish or matt black with all items except the 6mm toughened glass panels (or 6.38mm laminated glass). The complete kit avoids the requirement to purchase long lengths of extrusions, glazing rubber and accessories separately. The kits are packed in sturdy cardboard cartons for ease of storage and handling. Contact us for easy to use Excel calculator which specifies cut lengths of aluminium and make size of glass.
Simply input return panel width and height required and the Excel document provides the specifications and you can easily assemble the frame kit to the glass.

Framed return panel kit

SUITS UP TO 2150MM H x 1200MM W

Bright polish or matt black finish

Order Code: **TL-KIT-RTN-S (Bright silver)**
TL-KIT-RTN-BLK (Matt black)

INCLUDED IN KIT:

	Desc.	Spec.	Qty.
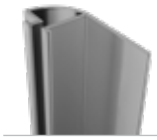	90 degree adapter Bright polish or matt black alloy 6063-T5	2150mm	1
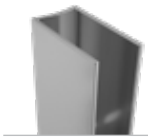	Wall U channel Bright polish or matt black alloy 6063-T5	2150mm	1
	Top/bottom horizontal rail Bright polish or mat black alloy 6063-T5	1109mm	2
	Vertical stile Bright polish or matt black alloy 6063-T5	2150mm	2
	6mm U channel glazing rubber | EVA	6498mm	1

	Desc.	Spec.	Qty.
	90 top caps (1x left & 1x right) | ABS Chrome or black	-	2
	Ø6mm x 29mm wall plugs PE	-	4
	ST4x30 pan head wall screws | SS3304	-	4
	ST4x10 CSK fixing screws SS3304	-	5
	ST4x30 pan head top/ bottom rail screws | SS3304	-	4
	3.2x7 rivets Aluminium – silver or black	-	5
	Screw covers PVC – silver or black	-	3

INLINE & RETURN PANELS SOLD SEPARATELY

135° framed adaptor kit

2 Pack

Bright polish or matt black finish

Order Code: **TSS-135EXT-2PK (Bright silver)**
TSS-135EXT-2PK-BLK (Matt black)

- Enables installation in a 135 degree configuration with 2 x return panels & 1 x inline panel
- 2 x lengths per kit – each 2150mm long
- Suits left & right door opening door
- Bright silver or matt black finish
- Use with Trilogy complete return panels and inline panels to create the 135 configuration
- If 2 x smaller return panels are required, custom made panels can easily be fabricated using the framed return extrusion kits to fully frame 2 x pieces of custom glass

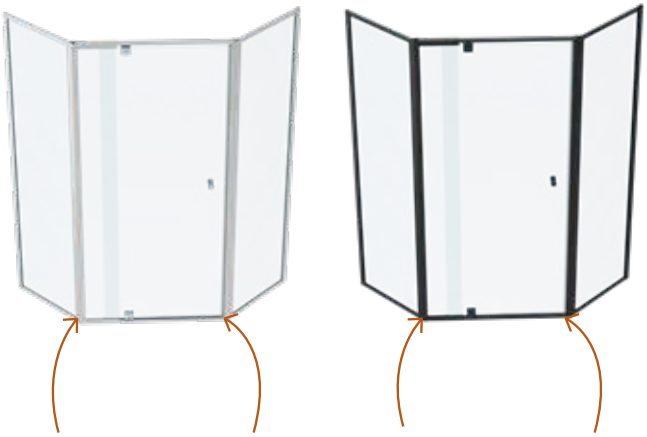

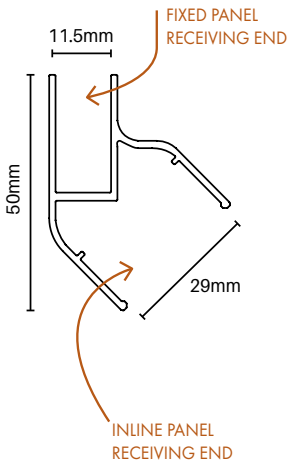

Images & drawings are not to scale

We can custom make Trilogy Return Panels.

If stocked return panels do not suit your job, simply order your fully custom made return panel from us!

1

DETERMINE SIZE OF RETURN PANEL

RETURN PANEL MEASURING OVERVIEW

OPENING HEIGHT[1]

> Measured from floor to top of return panel frame

OPENING WIDTH[2]

> Measured from wall to front edge of inline panel frame

TOP VIEW

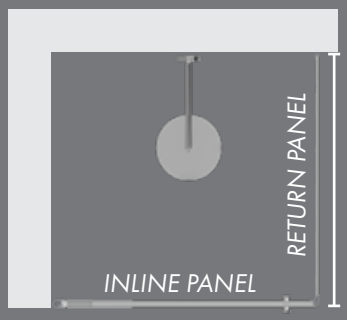

[1] **Height up to 2150mm**
1950mmH is standard as that aligns with inline panel height

[2] **Width up to 1200mm**

2

INPUT SIZES INTO OUR EASY TO USE FREE EXCEL ORDER FORM

> Instant pricing given so you can quickly quote to your customers

> Contact us and we can provide a link to the order form

3

EMAIL US THE COMPLETED ORDER SHEET

4

WE WILL CUSTOM MAKE A FULLY FRAMED TRILOGY RETURN PANEL IN EITHER BRIGHT POLISH OR MATT BLACK FRAMING WITH 6MM CLEAR TOUGHENED GLASS

5

PICK UP FROM ONE OF OUR 8 DEPOTS NATIONALLY OR WE CAN ARRANGE FREIGHT

(Freight extra from depots)

Images & drawings are not to scale

Meet our bathware ranges

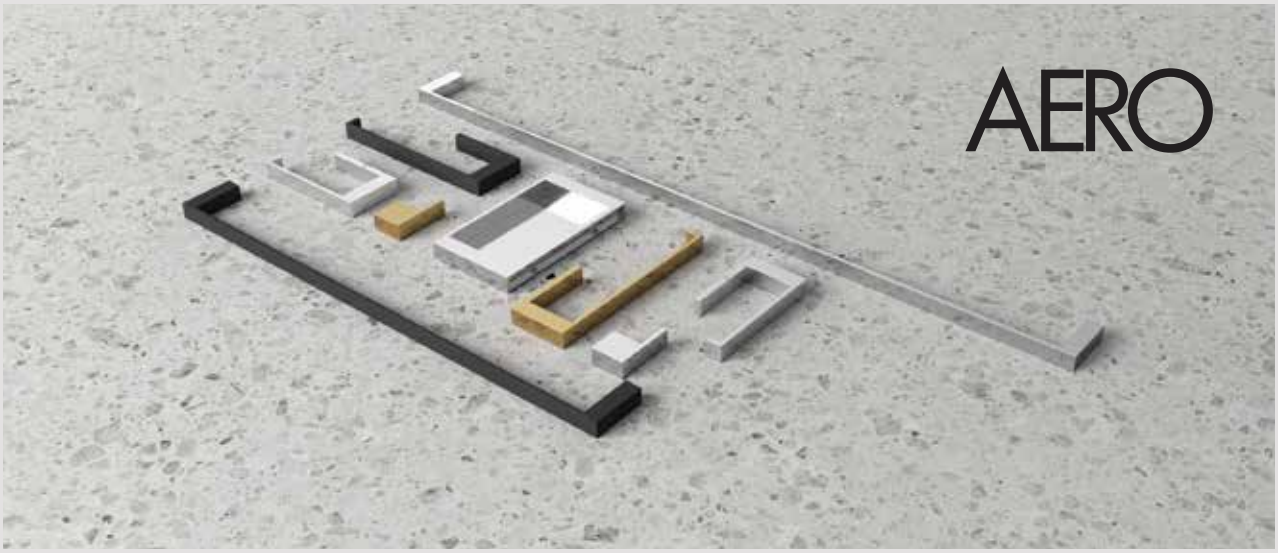

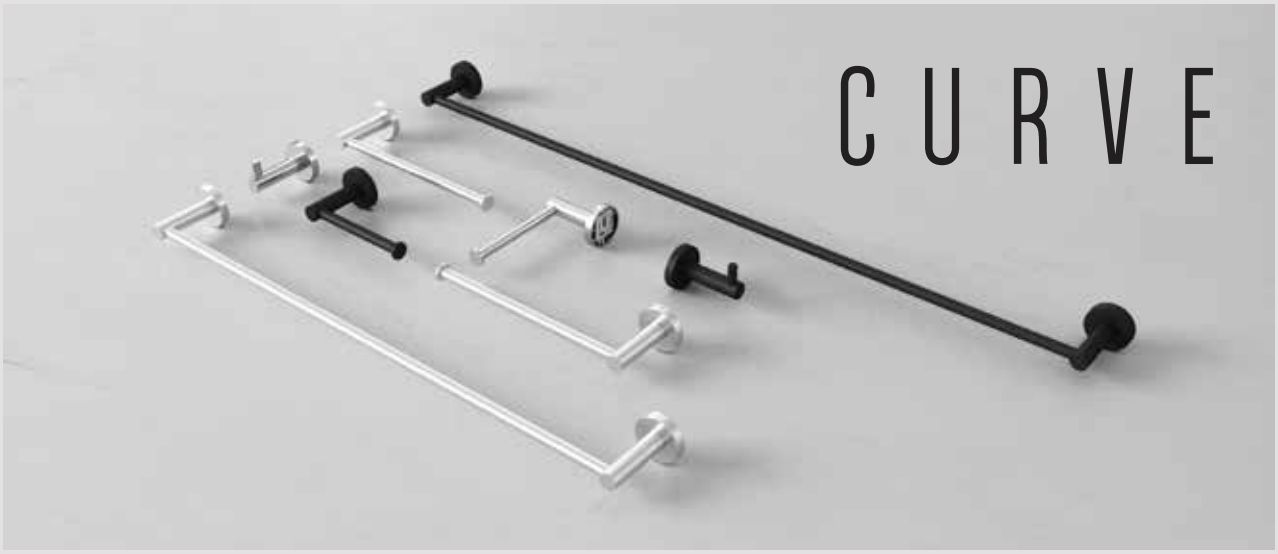

Images & drawings are not to scale

AERO

Designed with clean lines and careful consideration to proportions, the stylish Aero range will lift any bathroom. Hidden fixings ensure both ease of installation and stunning visual completion. Made from durable stainless steel 304, long lasting fittings are assured. Available in polish, satin, matt black and brushed brass/gold finishes.

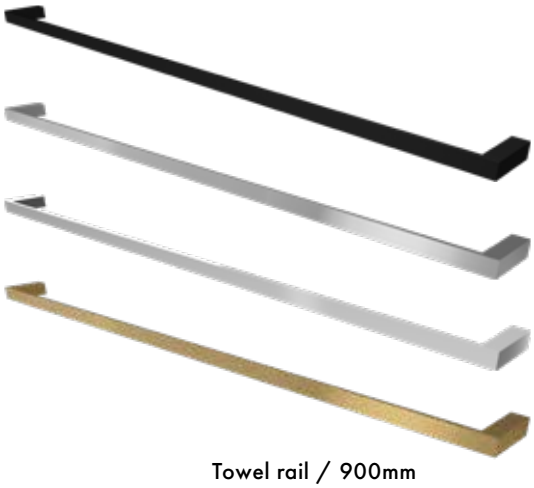

Towel rail / 900mm

Towel rail / 600mm

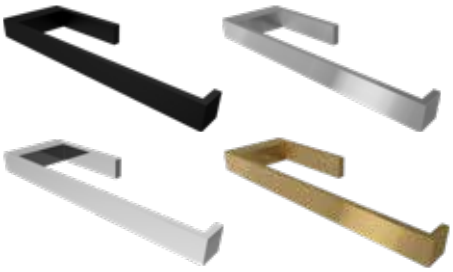

Hand towel rail

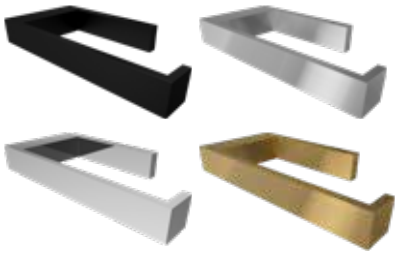

Toilet roll holder

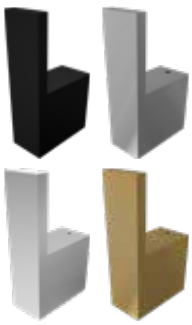

Towel hook

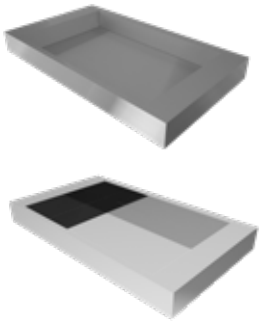

Shelf · dish

AERO RANGE

TOWEL RAIL / 900

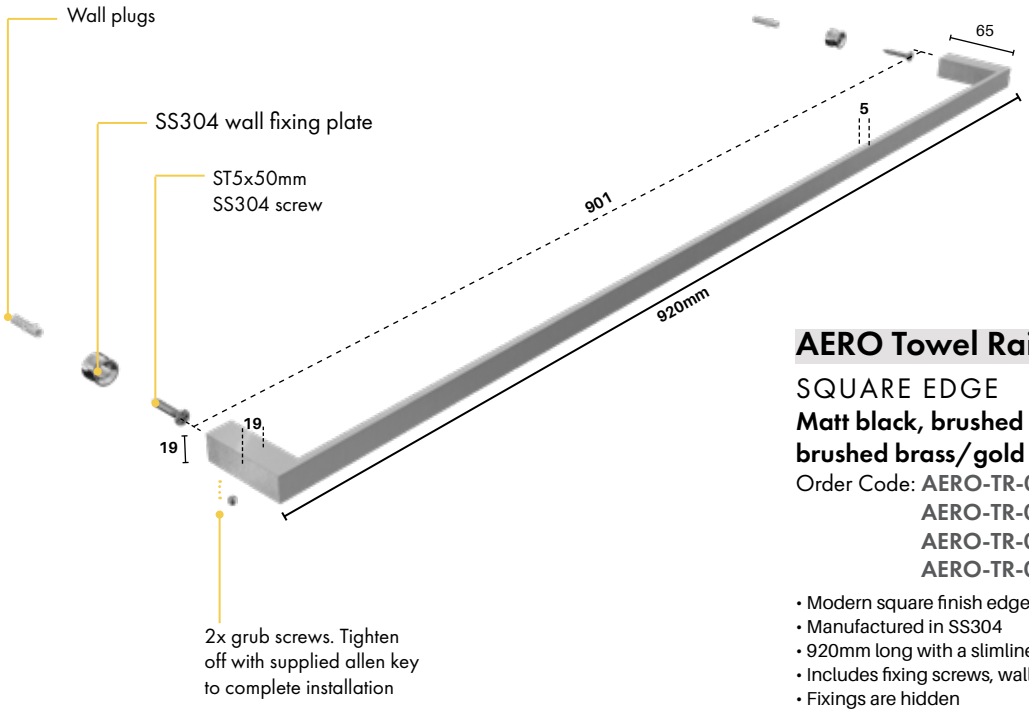

AVAILABLE FINISHES

AERO Towel Rail 900

SQUARE EDGE

Matt black, brushed satin, polish & brushed brass/gold finish

Order Code: **AERO-TR-0900-B (Matt Black)**
AERO-TR-0900-S (Brushed Satin)
AERO-TR-0900-P (Polish)
AERO-TR-0900-G (ORO Brushed Brass/Gold)

- Modern square finish edges
- Manufactured in SS304
- 920mm long with a slimline profile
- Includes fixing screws, wall plug & allen key
- Fixings are hidden
- Ideal for a large bath towel

TOWEL RAIL / 600

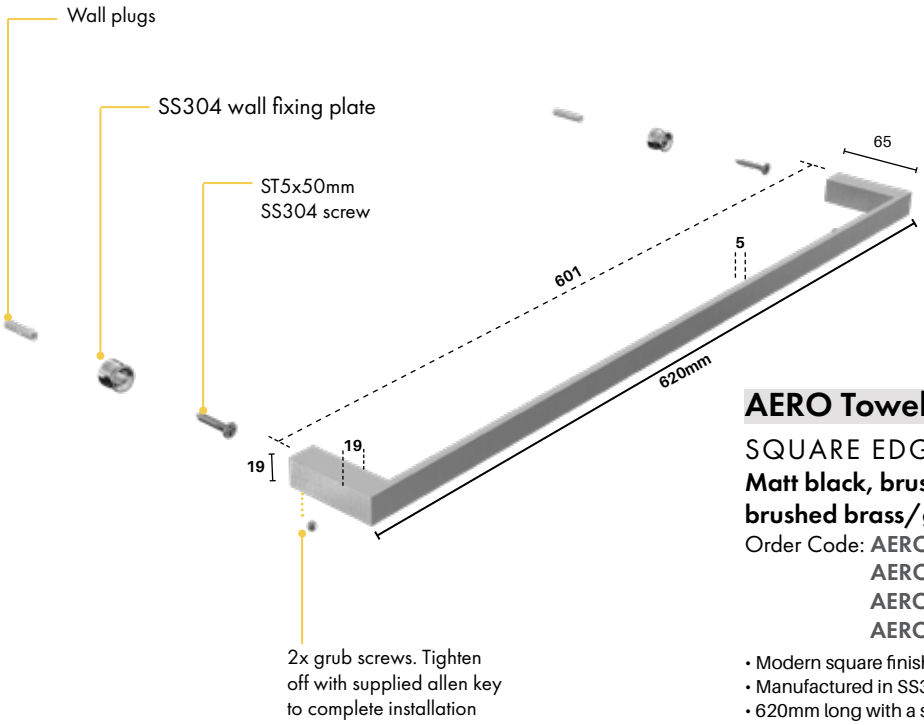

AVAILABLE FINISHES

AERO Towel Rail 600

SQUARE EDGE

Matt black, brushed satin, polish & brushed brass/gold finish

Order Code: **AERO-TR-0600-B (Matt Black)**
AERO-TR-0600-S (Brushed Satin)
AERO-TR-0600-P (Polish)
AERO-TR-0600-G (ORO Brushed Brass/Gold)

- Modern square finish edges
- Manufactured in SS304
- 620mm long with a slimline profile
- Includes fixing screws, wall plug & allen key
- Fixings are hidden
- Ideal for a bath towel or bath mat

Images & drawings are not to scale

AERO RANGE

HAND TOWEL RAIL

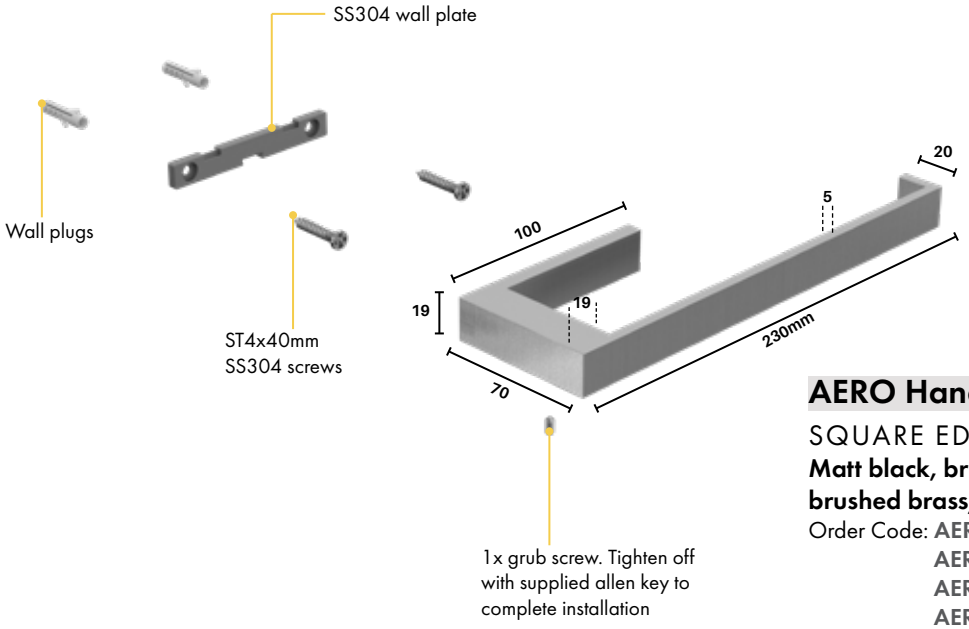

AVAILABLE FINISHES

AERO Hand Towel Rail

SQUARE EDGE

Matt black, brushed satin, polish & brushed brass/gold finish

Order Code: **AERO-HANDT-B (Matt Black)**
AERO-HANDT-S (Brushed Satin)
AERO-HANDT-P (Polish)
AERO-HANDT-G (ORO Brushed Brass/Gold)

- Modern square finish edges
- Manufactured in SS304
- 230mm long with a slimline profile
- Includes fixing screws, wall plug & allen key
- Fixings are hidden
- Ideal for a hand towel

TOILET ROLL HOLDER

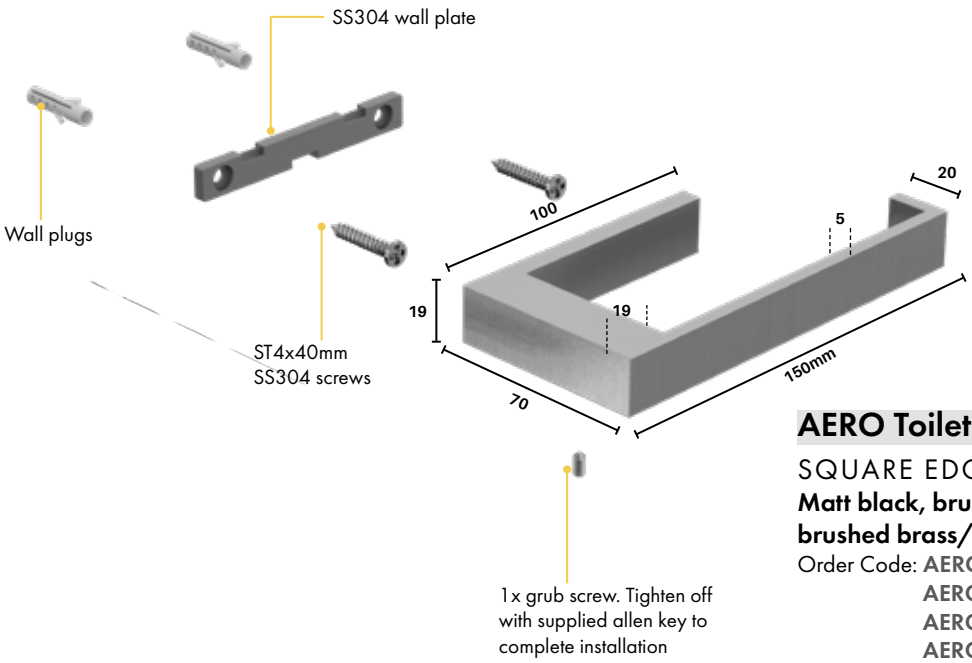

AVAILABLE FINISHES

AERO Toilet Roll Holder

SQUARE EDGE

Matt black, brushed satin, polish & brushed brass/gold finish

Order Code: **AERO-ROLL-B (Matt Black)**
AERO-ROLL-S (Brushed Satin)
AERO-ROLL-P (Polish)
AERO-ROLL-G (ORO Brushed Brass/Gold)

- Modern square finish edges
- Manufactured in SS304
- 150mm long with a slimline profile
- Includes fixing screws, wall plug & allen key
- Fixings are hidden

Images & drawings are not to scale

AERO RANGE

HOOK

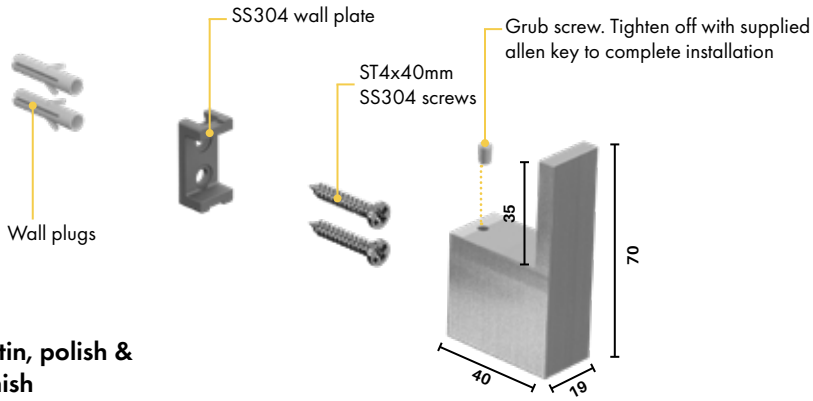

AVAILABLE FINISHES

AERO Hook

SQUARE EDGE

Matt black, brushed satin, polish & brushed brass/gold finish

Order Code: **AERO-HOOK-B (Matt Black)**
AERO-HOOK-S (Brushed Satin)
AERO-HOOK-P (Polish)
AERO-HOOK-G (ORO Brushed Brass/Gold)

- Modern square finish edges
- Manufactured in SS304
- Ideal for hanging towels, robes, clothes
- Includes fixing screws, wall plug & allen key
- Fixings are hidden

SHELF · DISH

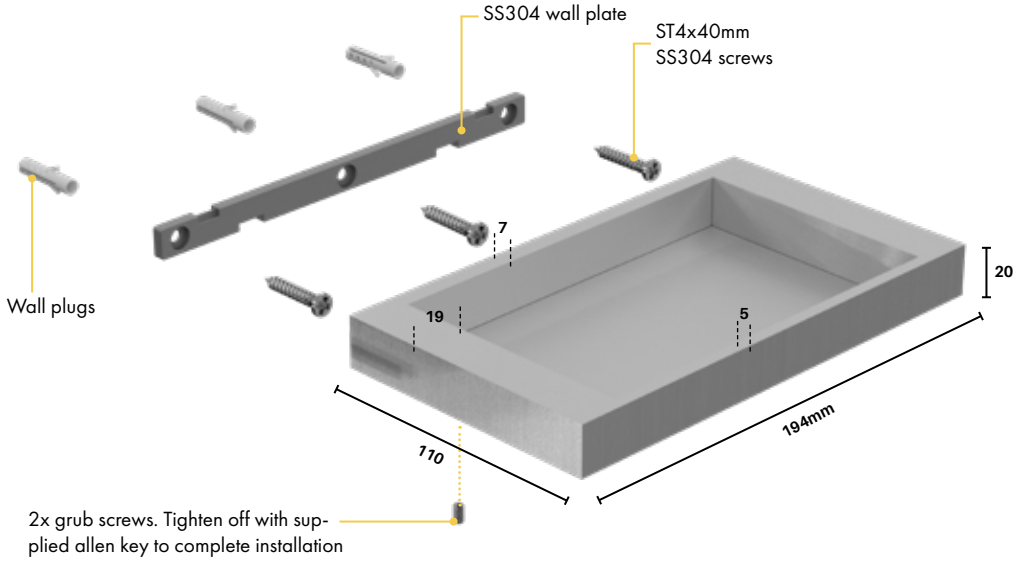

AVAILABLE FINISHES

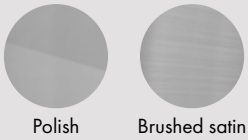

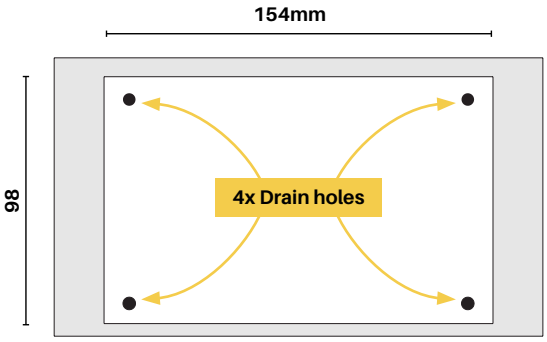

Plan View

AERO Shelf Dish

SQUARE EDGE

Brushed satin or polish finish

Order Code: **AERO-SHELF-S (Brushed Satin)**
AERO-SHELF-P (Polish)

- Modern square finish edges
- Manufactured in SS304
- Includes fixing screws, wall plug & allen key
- 4x discreet drain holes in tray

Images & drawings are not to scale

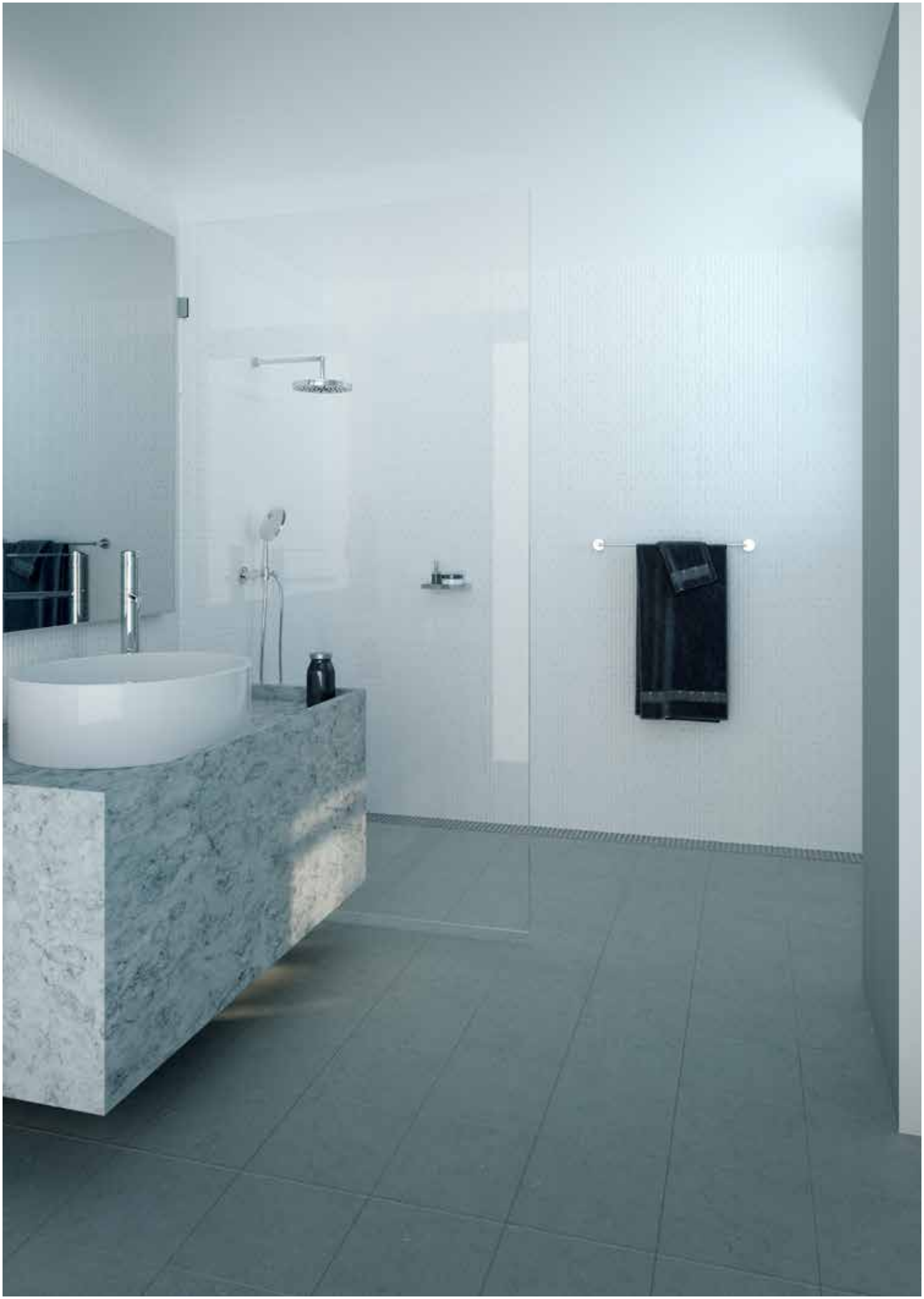

Images & drawings are not to scale

CURVE

CURVE is a revitalised and fresh approach with a nod to all things organic. Slimline round profiles provide a minimalist finish with the added feature of hidden fixings. Made from durable stainless steel 304. Available in polish, brushed satin and matt black finishes.

Towel rail / 900mm

Towel rail / 600mm

Hand towel rail

Toilet roll holder

Towel hook

CURVE RANGE

TOWEL RAIL / 900

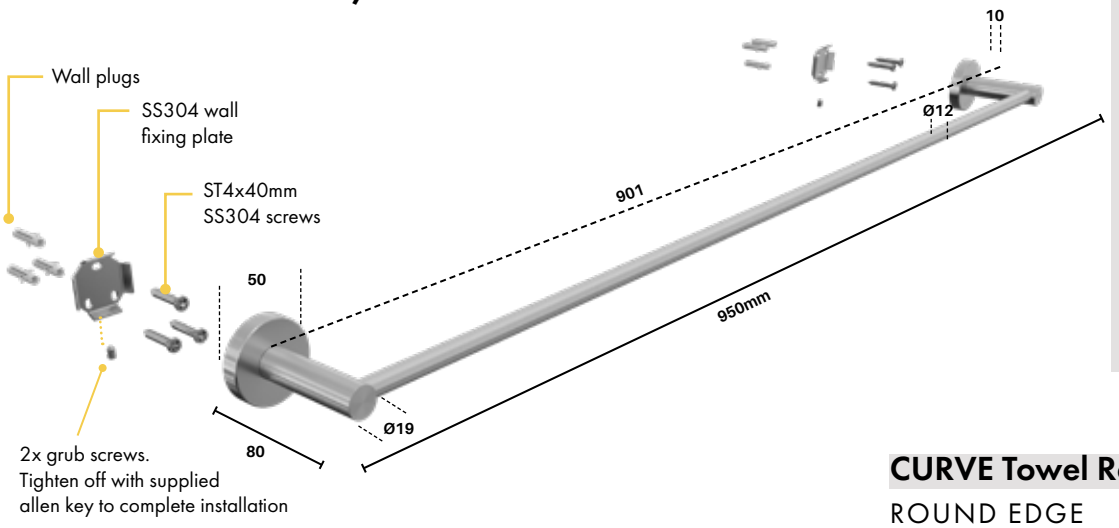

AVAILABLE FINISHES

Polish
Brushed satin
Matt black

CURVE Towel Rail 900

ROUND EDGE

Matt black, brushed satin or polish finish

Order Code: **CURVE-TR-0900-B (Matt Black)**
CURVE-TR-0900-S (Brushed Satin)
CURVE-TR-0900-P (Polish)

- Contemporary round finish edges
- Manufactured in SS304
- Includes fixing screws, wall plug & allen key
- Fixings are hidden
- Ideal for large bath towel

TOWEL RAIL / 600

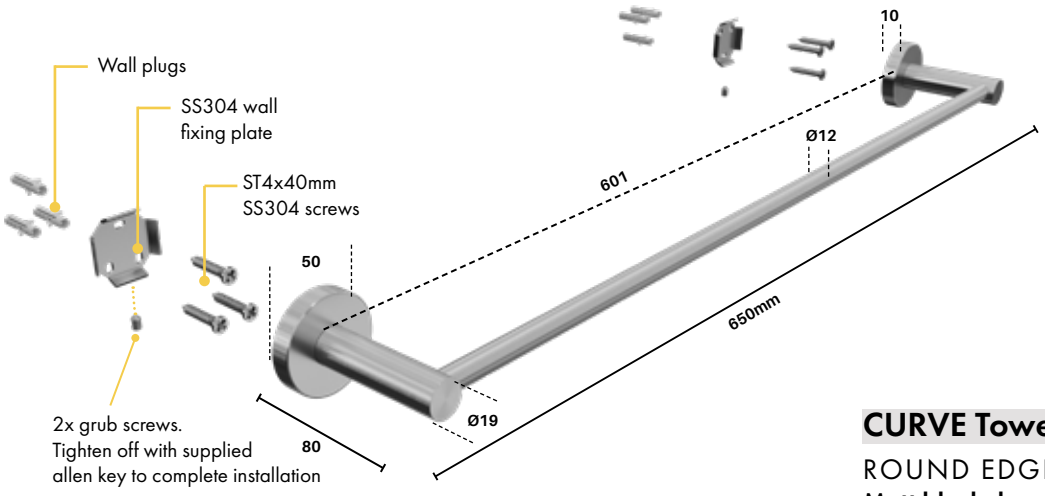

AVAILABLE FINISHES

Polish
Brushed satin
Matt black

CURVE Towel Rail 600

ROUND EDGE

Matt black, brushed satin or polish finish

Order Code: **CURVE-TR-0600-B (Matt Black)**
CURVE-TR-0600-S (Brushed Satin)
CURVE-TR-0600-P (Polish)

- Contemporary round finish edges
- Manufactured in SS304
- Includes fixing screws, wall plug & allen key
- Fixings are hidden
- Ideal for bath towel or bath mat

Images & drawings are not to scale

CURVE RANGE

HAND TOWEL RAIL

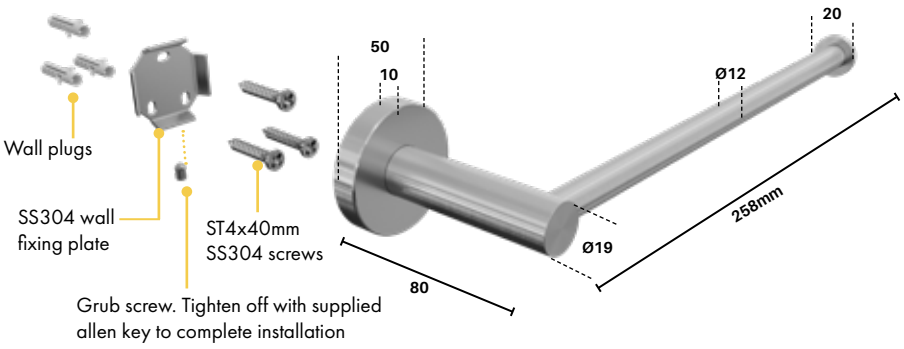

AVAILABLE FINISHES

Polish
Brushed satin
Matt black

CURVE Hand Towel Rail

ROUND EDGE

Matt black, brushed satin or polish finish

Order Code: **CURVE-HANDT-B (Matt Black)**
CURVE-HANDT-S (Brushed Satin)
CURVE-HANDT-P (Polish)

- Contemporary round finish edges
- Manufactured in SS304
- Includes fixing screws, wall plug & allen key
- Fixings are hidden
- Ideal for a hand towel

TOILET ROLL HOLDER

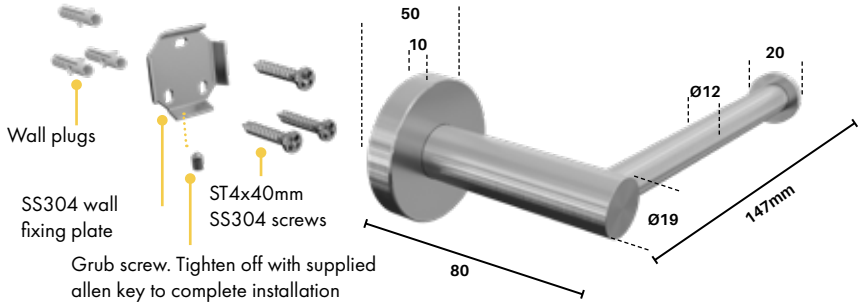

AVAILABLE FINISHES

Brushed satin
Matt black

CURVE Toilet Roll Holder

ROUND EDGE

Matt black or brushed satin finish

Order Code: **CURVE-ROLL-B (Matt Black)**
CURVE-ROLL-S (Brushed Satin)

- Contemporary round finish edges
- Manufactured in SS304
- Includes fixing screws, wall plug & allen key
- Fixings are hidden

HOOK

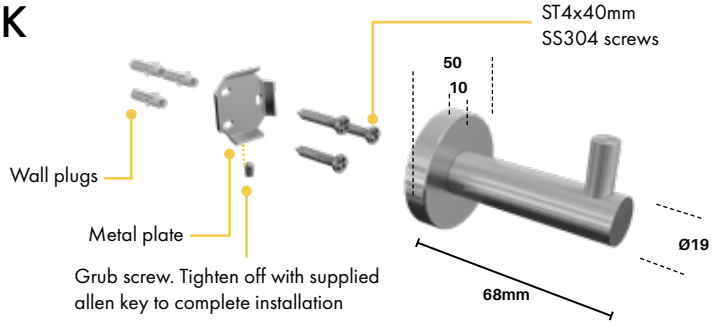

AVAILABLE FINISHES

Polish
Brushed satin
Matt black

CURVE Hook

ROUND EDGE

Matt black, brushed satin or polish finish

Order Code: **CURVE-HOOK-B (Matt Black)**
CURVE-HOOK-S (Brushed Satin)
CURVE-HOOK-P (Polish)

- Contemporary round finish edges
- Manufactured in SS304
- Includes fixing screws, wall plug & allen key
- Fixings are hidden
- Ideal for hanging towels, robes and clothing

Images & drawings are not to scale

PILLAR

Truly unique and distinctive in design, the Pillar range stands out from the crowd for stylish bathroom accessories. Utilising innovate manufacturing processes, the slimline 16mm bar appears to gently rest against supports providing a unique aesthetic. The Pillar range, made from durable stainless steel 304, lifts the bar in functional design of bathroom accessories.

Towel rail / 900mm

Towel rail / 600mm

Towel rail / 300mm

Hand towel rail

Toilet roll holder

Towel hook

Glass shelf

Stainless steel shelf

PILLAR RANGE

TOWEL RAIL / 900

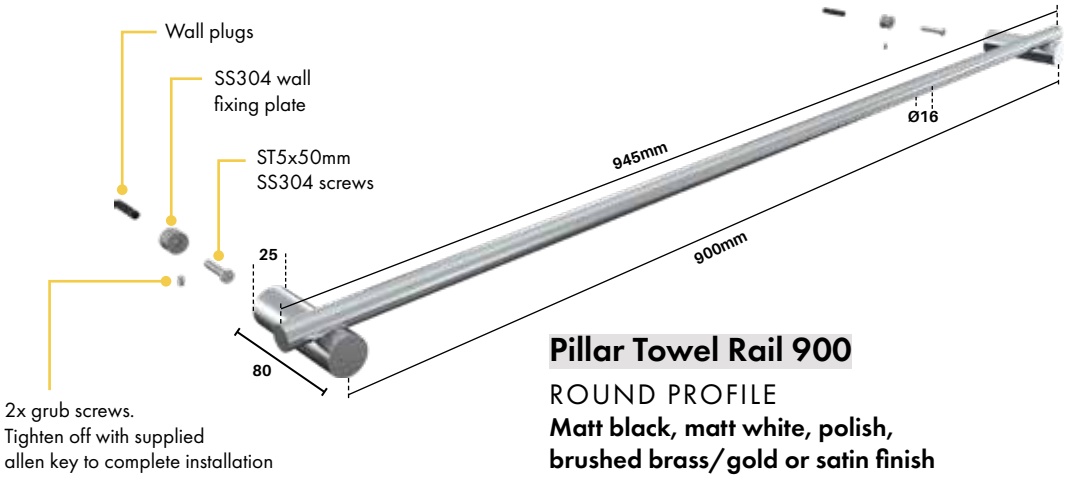

AVAILABLE FINISHES

Pillar Towel Rail 900

ROUND PROFILE

Matt black, matt white, polish, brushed brass/gold or satin finish

Order Code: **PIL-TR-0900-B (Matt Black)**
PIL-TR-0900-W (Matt White)
PIL-TR-0900-P (Polish)
PIL-TR-0900-G (ORO Brushed Brass/Gold)
PIL-TR-0900-S (Satin)

- Distinctive design feature – horizontal bar appears to be 'resting' on top of supports
- Slimline round 16mm diameter bar
- Manufactured in SS304
- Includes fixing screws, wall plug & allen key
- Fixings are hidden. Easy to install
- Install instructions included with each box. Colour printed box with barcode
- Suits hanging 2 folded bath towels

TOWEL RAIL / 600

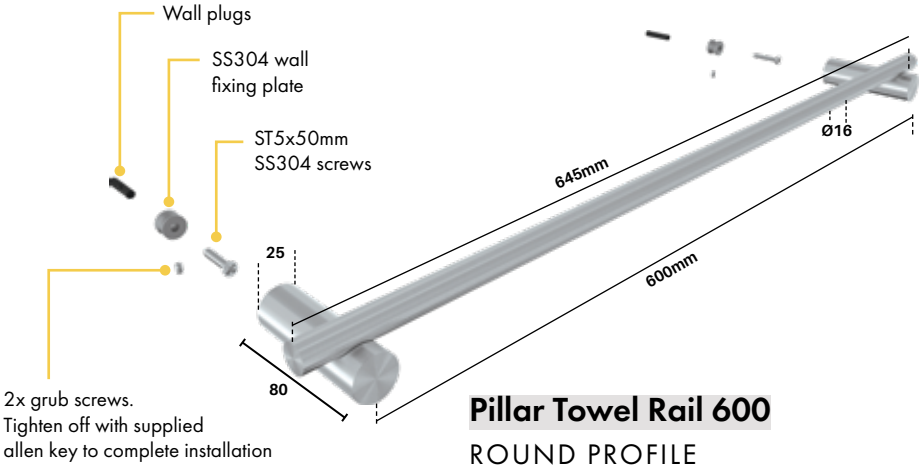

AVAILABLE FINISHES

Pillar Towel Rail 600

ROUND PROFILE

Matt black, matt white, polish, brushed brass/gold or satin finish

Order Code: **PIL-TR-0600-B (Matt Black)**
PIL-TR-0600-W (Matt White)
PIL-TR-0600-P (Polish)
PIL-TR-0600-G (ORO Brushed Brass/Gold)
PIL-TR-0600-S (Satin)

- Distinctive design feature – horizontal bar appears to be 'resting' on top of supports
- Slimline round 16mm diameter bar
- Manufactured in SS304
- Includes fixing screws, wall plug & allen key
- Fixings are hidden. Easy to install
- Install instructions included with each box. Colour printed box with barcode
- Suits hanging large bath towel or bath mat

Images & drawings are not to scale

PILLAR RANGE

TOWEL RAIL / 300

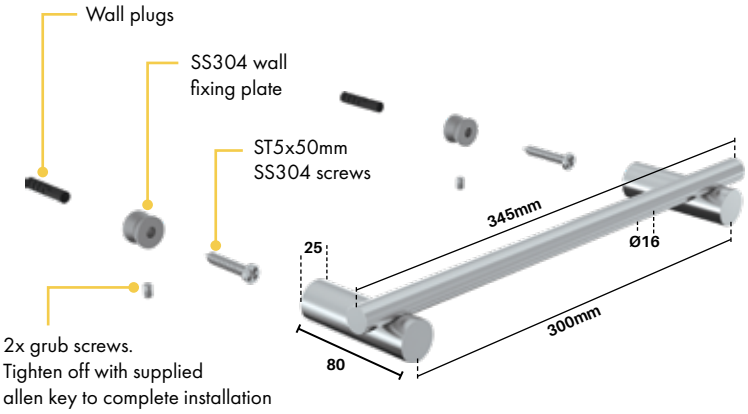

AVAILABLE FINISHES

Pillar Towel Rail 300

ROUND PROFILE

Matt black, matt white, polish, brushed brass/gold or satin finish

Order Code: **PIL-TR-0300-B (Matt Black)**
PIL-TR-0300-W (Matt White)
PIL-TR-0300-P (Polish)
PIL-TR-0300-G (ORO Brushed Brass/Gold)
PIL-TR-0300-S (Satin)

- Distinctive design feature – horizontal bar appears to be 'resting' on top of supports
- Slimline round 16mm diameter bar
- Manufactured in SS304
- Includes fixing screws, wall plug & allen key
- Fixings are hidden. Easy to install
- Install instructions included with each box. Colour printed box with barcode
- Suits hanging bath towel or hand towel

HAND TOWEL RAIL

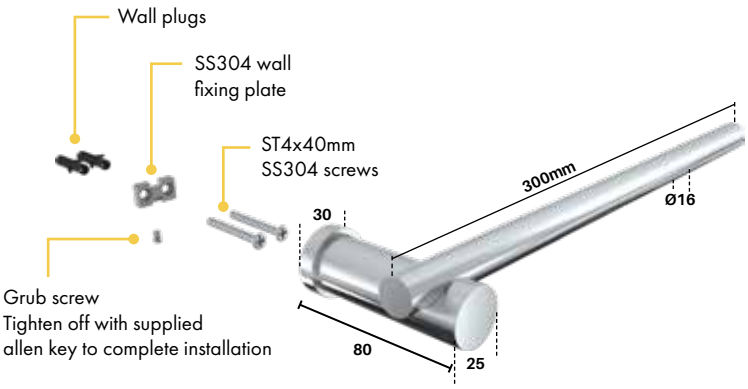

AVAILABLE FINISHES

Pillar Hand Towel Rail

ROUND PROFILE

Matt black, matt white, polish, brushed brass/gold or satin finish

Order Code: **PIL-HANDT-B (Matt Black)**
PIL-HANDT-W (Matt White)
PIL-HANDT-P (Polish)
PIL-HANDT-G (ORO Brushed Brass/Gold)
PIL-HANDT-S (Satin)

- Distinctive design feature – horizontal bar appears to be 'resting' on top of support
- Slimline round 16mm diameter bar
- Manufactured in SS304
- Includes fixing screws, wall plug & allen key
- Fixings are hidden. Easy to install
- 2 x fixings into wall to prevent chance of towel rail rotating
- Install instructions included with each box. Colour printed box with barcode
- Suits hanging of hand towel

Images & drawings are not to scale

PILLAR RANGE

TOILET ROLL HOLDER

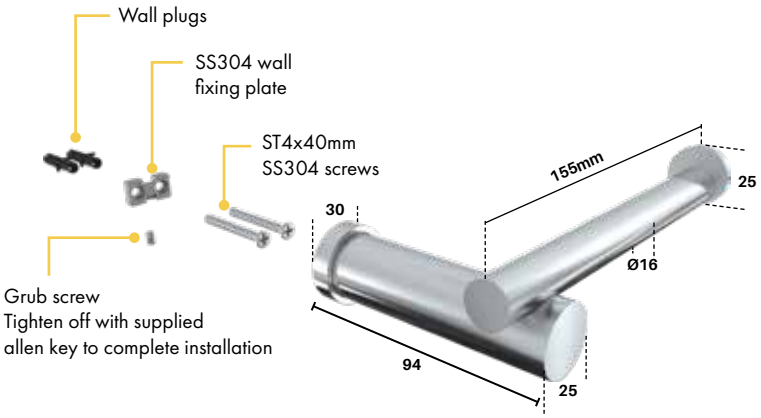

AVAILABLE FINISHES

Pillar Toilet Roll Holder

ROUND PROFILE

Matt black, matt white, polish, brushed brass/gold or satin finish

Order Code: **PIL-ROLL-B (Matt Black)**
PIL-ROLL-W (Matt White)
PIL-ROLL-P (Polish)
PIL-ROLL-G (ORO Brushed Brass/Gold)
PIL-ROLL-S (Satin)

- Distinctive design feature – horizontal bar appears to be 'resting' on top of support
- Slimline round 16mm diameter bar
- Manufactured in SS304
- Includes fixing screws, wall plug & allen key
- Fixings are hidden. Easy to install
- 2 x fixings into wall to prevent chance of rotating
- Install instructions included with each box. Colour printed box with barcode
- Stylish solution for toilet roll holder

HOOK

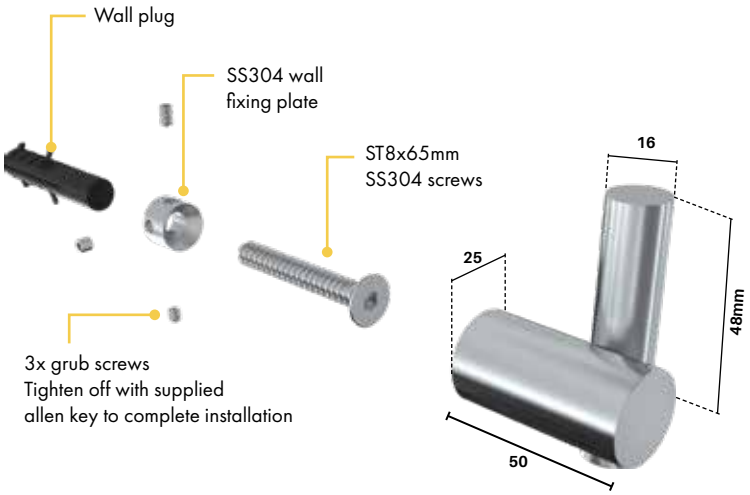

AVAILABLE FINISHES

Pillar Towel Hook

ROUND PROFILE

Matt black, matt white, polish, brushed brass/gold or satin finish

Order Code: **PIL-HOOK-B (Matt Black)**
PIL-HOOK-W (Matt White)
PIL-HOOK-P (Polish)
PIL-HOOK-G (ORO Brushed Brass/Gold)
PIL-HOOK-S (Satin)

- Distinctive design feature – vertical hook appears to be 'resting' against side of horizontal stem
- Hook is slimline round 16mm diameter bar
- Manufactured in SS304
- Includes fixing screws, wall plug & allen key
- Fixings are hidden. Easy to install
- Install instructions included with each box. Colour printed box with barcode
- A simple solution for hanging of towels, bath robes or similar

Images & drawings are not to scale

PILLAR RANGE

GLASS SHELF

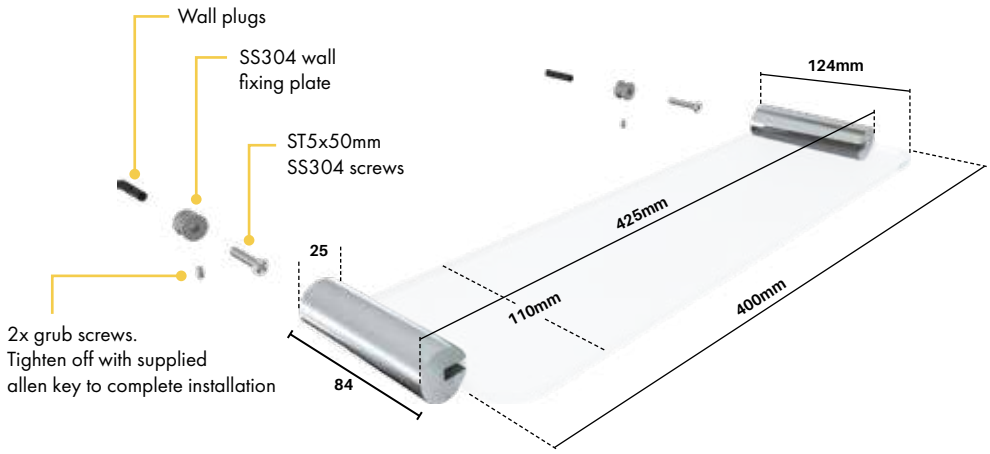

AVAILABLE FINISHES

Polish
Matt white
Matt black
Brushed brass/gold

Pillar Glass Shelf

ROUND PROFILE / GLASS SHELF

Matt black, matt white, polish or brushed brass/gold finish

Order Code: **PIL-SHELF-GLASS-B (Matt Black)**
PIL-SHELF-GLASS-W (Matt White)
PIL-SHELF-GLASS-P (Polish)
PIL-SHELF-GLASS-G (ORO Brushed Brass/Gold)

- Stylish glass shelf – low iron 6mm clear toughened glass
- Side supports are SS304
- Includes fixing screws, wall plug & allen key
- Fixings are hidden. Easy to install
- Install instructions included with each box. Colour printed box with barcode

SS SHELF

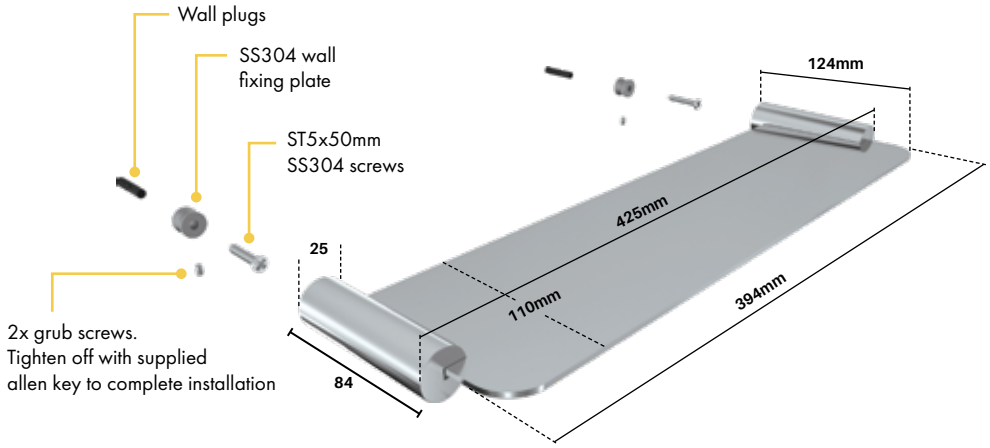

AVAILABLE FINISHES

Polish
Matt white
Matt black
Brushed brass/gold

Pillar Stainless Steel Shelf

ROUND PROFILE / SS304 SHELF

Matt black, matt white, polish or brushed brass/gold finish

Order Code: **PIL-SHELF-SS-B (Matt Black)**
PIL-SHELF-SS-W (Matt White)
PIL-SHELF-SS-P (Polish)
PIL-SHELF-SS-G (ORO Brushed Brass/Gold)

- Stylish stainless steel SS304 shelf with supports
- Sturdy shelf to suit a variety of bathroom storage applications
- Not recommended for in-shower installation due to potential issues caused by long term exposure of soaps, shampoos on shelf finished surface
- Includes fixing screws, wall plug & allen key
- Fixings are hidden. Easy to install
- Install instructions included with each box. Colour printed box with barcode

Images & drawings are not to scale

PILLAR

Images & drawings are not to scale

SHOWER HINGES OVERVIEW

	PURITY BIANCO CHROME	ZURICH CHROME	ZURICH PEARL SATIN CHROME
GLASS TO GLASS HINGE • SUITS 8 & 10MM THICK GLASS • "D" STYLE CUT OUT			
GLASS TO GLASS HINGE HEAVY DUTY • SUITS 8 & 10MM THICK GLASS • "D" STYLE OR MICKEY MOUSE CUT OUT • FOR LARGER/HEAVIER DOORS		N/A	N/A
GLASS TO WALL HINGE HEAVY DUTY • SUITS 8 & 10MM THICK GLASS • "D" STYLE OR MICKEY MOUSE CUT OUT • FOR LARGER/HEAVIER DOORS		N/A	N/A
GLASS TO WALL HINGE • SUITS 8 & 10MM THICK GLASS • "D" STYLE CUT OUT			
GLASS TO OFFSET WALL HINGE • SUITS 8 & 10MM THICK GLASS • "D" STYLE CUT OUT			
GLASS TO **90**° HINGE • SUITS 8 & 10MM THICK GLASS • "D" STYLE CUT OUT	N/A		
GLASS TO **135**° HINGE • SUITS 8 & 10MM THICK GLASS • "D" STYLE CUT OUT • IDEAL FOR DIAMOND SHAPE INSTALLATIONS			
3 WAY GLASS TO GLASS HINGE • SUITS 8 & 10MM THICK GLASS • "D" STYLE CUT OUT • HINGING OF 2 X DOORS FROM 1 X HINGE PANEL		N/A	N/A
GLASS TO GLASS HINGE SUITS 6 & 8MM GLASS ONLY • "D" STYLE CUT OUT	N/A		N/A
GLASS TO WALL HINGE SUITS 6 & 8MM GLASS ONLY • "D" STYLE CUT OUT	N/A		N/A

Images & drawings are not to scale

PURITY NERO MATT BLACK	PURITY GIO GUNMETAL	PURITY ORO BRUSHED GOLD	PURITY SNO MATT WHITE	PURITY NiKL BRUSHED NICKEL
	N/A	N/A	N/A	N/A
	N/A	N/A	N/A	N/A
	N/A	N/A	N/A	N/A
	N/A	N/A	N/A	N/A
N/A	N/A	N/A	N/A	N/A
N/A	N/A	N/A	N/A	N/A

WALL BRACKET & KNOB HARDWARE OVERVIEW

	PURITY BIANCO CHROME	ZURICH CHROME	ZURICH PEARL SATIN CHROME
WALL BRACKET • 2 X COMPRESSION SCREWS • NO HOLES REQUIRED IN GLASS PANEL		N/A	
OFFSET WALL BRACKET • 2 X COMPRESSION SCREWS • NO HOLES REQUIRED IN GLASS PANEL		N/A	
ROUND WALL BRACKET • 1 X COMPRESSION SCREW • NO HOLES REQUIRED IN GLASS PANEL		N/A	N/A
WALL BRACKET SUITS 6MM GLASS ONLY • 1 X COMPRESSION SCREW • NO HOLES REQUIRED IN GLASS PANEL		N/A	N/A
ROUND CIRCULAR KNOB		N/A	
FULL ROUND KNOB			
ROUND RECESSED KNOB		N/A	N/A
SQUARE RECESSED KNOB		N/A	N/A
SQUARE L SHAPE KNOB		N/A	N/A
SQUARE FULL KNOB	N/A		

FOR MECHANICAL FIX BRACKETS – SEE PAGE 32-33

Images & drawings are not to scale

PURITY NERO MATT BLACK	PURITY GIO GUNMETAL	PURITY ORO BRUSHED GOLD	PURITY SNO MATT WHITE	PURITY NiKL BRUSHED NICKEL
	N/A	N/A	N/A	N/A
N/A	N/A	N/A	N/A	N/A
	N/A	N/A	N/A	N/A
	N/A	N/A	N/A	N/A
	N/A	N/A	N/A	N/A
	N/A	N/A	N/A	N/A
N/A	N/A	N/A	N/A	N/A

Images & drawings are not to scale

BRACKET & HANDLE HARDWARE OVERVIEW

	PURITY BIANCO CHROME	ZURICH CHROME		ZURICH PEARL SATIN CHROME	
SQUARE D HANDLE	180MM LONG	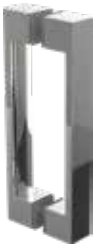 180MM LONG	250MM LONG	180MM LONG	250MM LONG
D ROUND HANDLE WITH KNOB		N/A		N/A	
450MM ROUND D HANDLE		N/A		N/A	
GLASS BRACE BRACKET – SMALL		N/A			
GLASS BRACE BRACKET – LARGE		N/A			

PURITY NERO MATT BLACK	PURITY GIO GUNMETAL	PURITY ORO BRUSHED GOLD	PURITY SNO MATT WHITE	PURITY NiKL BRUSHED NICKEL
 180MM LONG	N/A	N/A	N/A	N/A
N/A	N/A	N/A	N/A	N/A
N/A	N/A	N/A	N/A	N/A

BRACKET & HANDLE HARDWARE OVERVIEW

	PURITY BIANCO CHROME	ZURICH CHROME	ZURICH PEARL SATIN CHROME
ADJUSTABLE ARM BRACKET		N/A	
ROUND HORIZONTAL SUPPORT ARM		N/A	
SQUARE HORIZONTAL SUPPORT ARM		N/A	N/A
VERTICAL STABILISER ARM		N/A	N/A
PURITY "L" BRACE	POLISH 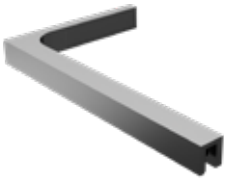	N/A	SATIN
WATER BAR – 6MM HIGH	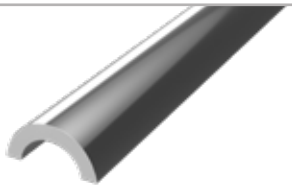	N/A	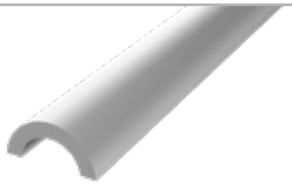
WATER BAR – 9MM HIGH	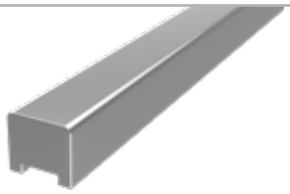	N/A	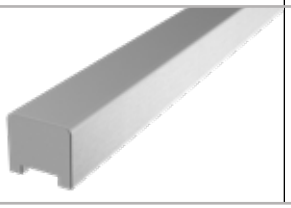

PURITY NERO MATT BLACK	PURITY GIO GUNMETAL	PURITY ORO BRUSHED GOLD	PURITY SNO MATT WHITE	PURITY NiKL BRUSHED NICKEL
	N/A	N/A	N/A	N/A
N/A	N/A	N/A	N/A	N/A
N/A	N/A	N/A	N/A	N/A

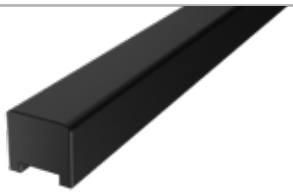	N/A USE BLACK OR NIKL WATER BAR		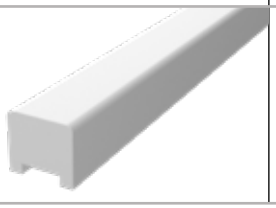	

Project orders
now available.

Huge savings on the best quality custom made glass for commercial & domestic projects

Simply provide job specification of shower screen panels and we will arrange quick production. Glass Outlet specialises in project glass supply made to order – toughened or laminated glass.
Minimum order quantity only 25sqm

Toughened glass project orders

Glass Outlet's focus is on supplying the absolute best quality glass, no exceptions. We are able to supply made to size toughened glass in 4mm, 5mm, 6mm, 8mm, 10mm, 12mm or 15mm thicknesses in clear & various tints at the best price with quick lead times – heat soaking is also available. A full range of made to size laminated glass is available including 6.38mm, 8.38mm, 10.38mm and 12.38mm thick. Enjoy huge savings without compromising on quality.

Quality control

All project glass orders are carefully quality control inspected at each critical step of manufacture to ensure compliance to strict standards. Only the most suitable processing equipment is used in the manufacturing process to achieve the high quality standards required.

Easy order form

Contact us for our easy to use excel order form so you can cost project orders instantly!

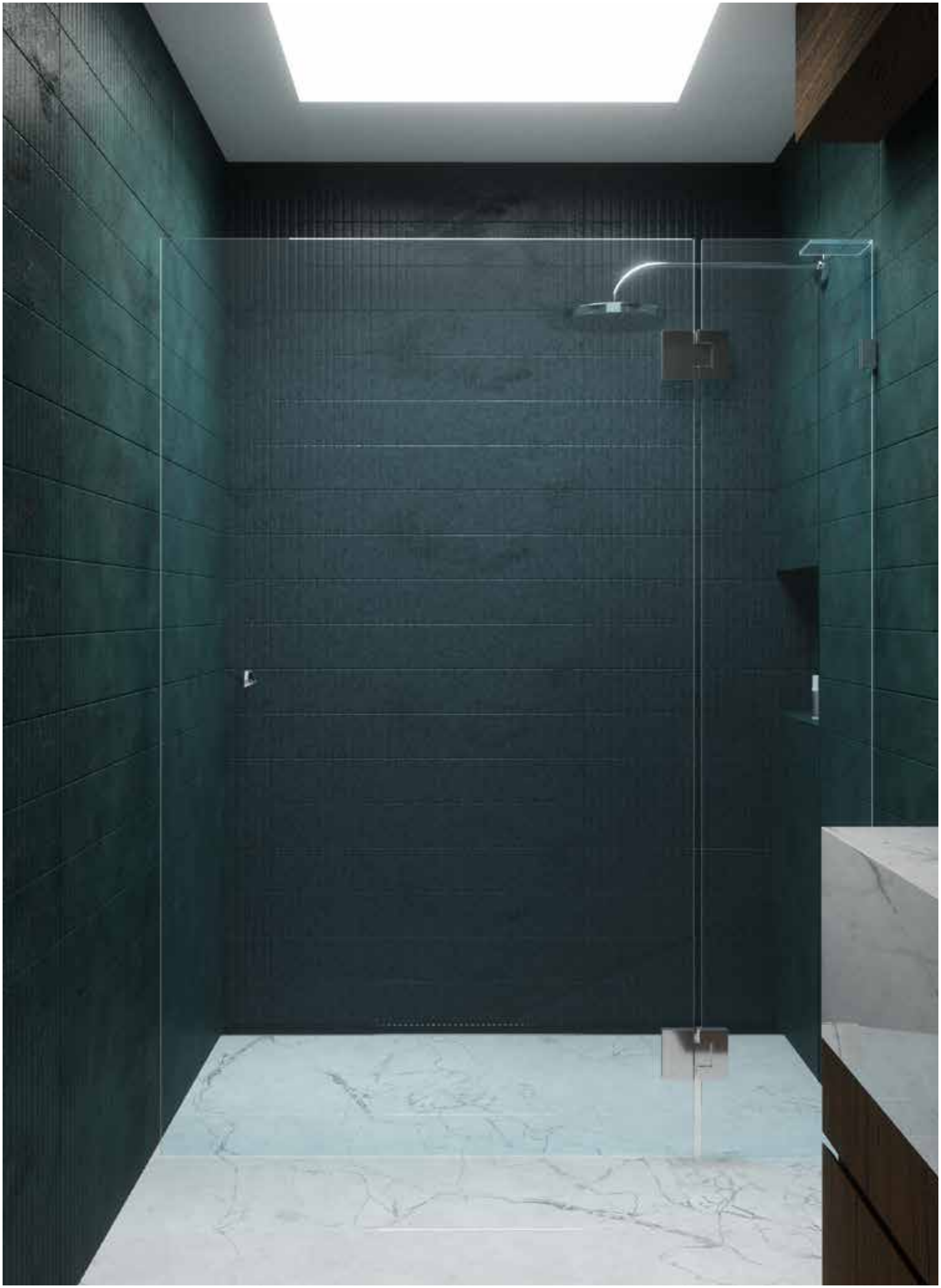

NEW
RELEASE
We are excited to introduce our latest innovation: drainlab®
Offering a perfect blend of form and function, seamlessly integrating into any space while efficiently managing water drainage. The sleek design enhances the aesthetic appeal, while ensuring practicality and durability.
Launching mid 2024.
drainlab

Australia's largest range to the trade only

HEAD TO OUR WEBSITE TO DOWNLOAD ALL OF OUR CATALOGUES

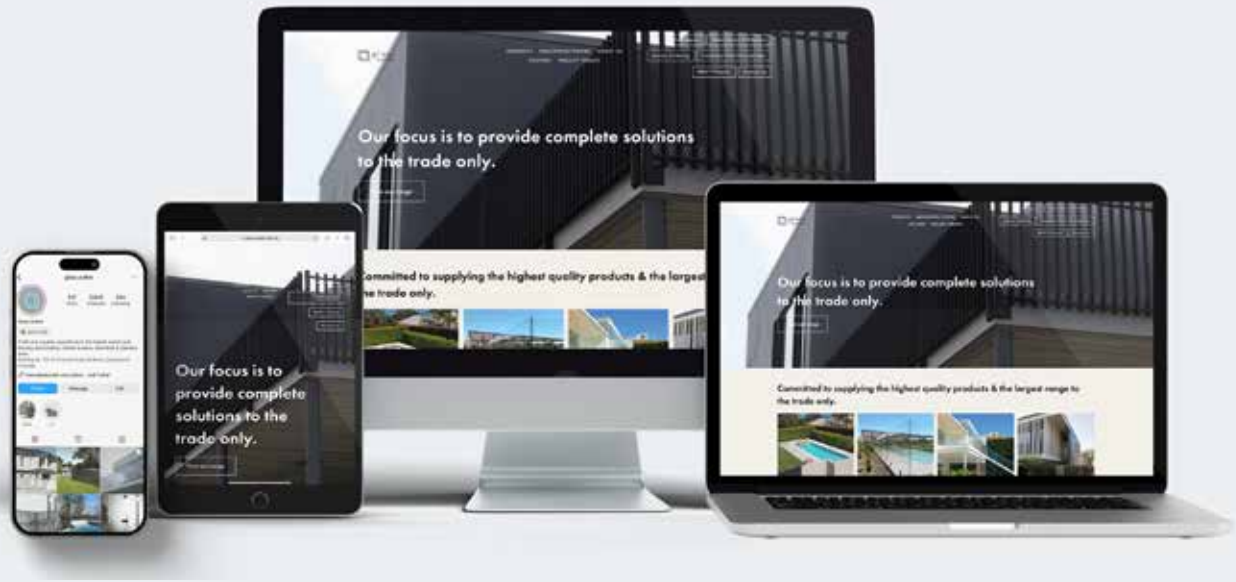

Visit the website and follow us on Instagram

New releases, catalogues and special deals, all at your fingertips.

www.glassoutlet.com.au

@glass.outlet

FROM US TO YOU, REAL QUICK.

AUSTRALIA WIDE DELIVERY OPTIONS

Online ordering is now available across our in stock ranges. Open 24/7 – Save your favourites, view your invoices and jump straight to our latest catalogues and the best part it's all at your fingertips with your trade/ wholesale pricing. Login or register now for your secure username & password
www.glassoutletonline.com.au

Pick up is available from all 9 of our depots in Queensland, Melbourne, Newcastle, Adelaide and Perth.

We also offer a preorder + collect system for when you are tight on time. Contact us for more info.

We aim to provide fast delivery every time by utilising multiple distribution centres across the country with dedicated delivery trucks.

With depots in Brisbane, Ipswich, Yatala, Gold Coast, Derrimut, Dandenong, Adelaide, Newcastle and Perth.

Palletised freight & smaller courier orders can be organised for a huge range of our products. Contact us to discuss quick & cost effective options.

OUR DEPOTS

Queensland

BRISBANE

07 3267 7968

salesbris@glassoutlet.com.au

Building 9, 153 St Vincents Rd
Virginia, QLD 4014

Office opening hours:
Mon-Fri: 7am-3:30pm
Warehouse opening hours:
Mon-Fri: 7am-3pm

GOLD COAST

07 5594 0343

salesgc@glassoutlet.com.au

28 Barnett Place
Molendinar, QLD 4214

Office & warehouse opening hours:
Mon-Fri: 7am-3pm

IPSWICH

07 4333 1800

salesips@glassoutlet.com.au

Unit 2, 31 Access Place
Bundamba, QLD 4304

Office & warehouse opening hours:
Mon-Fri: 7am-3.30pm

YATALA

07 3445 4004

sales@aluminiumoutlet.com.au

4 Binary Street
Yatala, QLD 4207

Office & warehouse opening hours:
Mon-Fri: 7am-3pm

South Australia

ADELAIDE

08 8359 4048

salesadl@glassoutlet.com.au

490 Churchill Rd
Kilburn, SA 5084

Office & warehouse opening hours:
Mon-Fri: 7:30am-3:30pm

Western Australia

PERTH

08 6499 2868

saleswa@glassoutlet.com.au

10A Marriott Rd
Jandakot, WA 6164

Office & warehouse opening hours:
Mon-Fri: 7:30am-3:30pm

New South Wales

NEWCASTLE

02 4069 0833

salesnc@glassoutlet.com.au

9B Pennant Street
Cardiff, NSW 2285

Office & warehouse opening hours:
Mon-Fri: 7:30am-3:30pm

Victoria

MELBOURNE WEST

03 9363 7744

salesder@glassoutlet.com.au

1/139 Studley Crt
Derrimut, VIC 3026

Office & warehouse opening hours:
Mon-Fri: 7:30am-3:30pm

MELBOURNE SOUTH EAST

03 9706 9886

salesdan@glassoutlet.com.au

15 Stephen Rd
Dandenong South, VIC 3175

Office & warehouse opening hours:
Mon-Fri: 7:30am-3:30pm

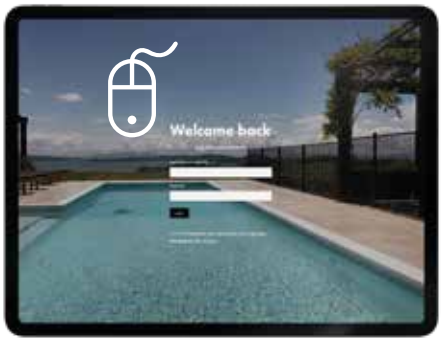

LOVE TO SEE YOU AT OUR ONLINE STORE

glassoutletonline.com.au

LET'S GET SOCIAL

@glass.outlet

Errors and omissions excepted. Measurements and drawings are provided as a guide only and should not be relied upon solely for installation purposes. Product codes, products and prices may change at Glass Outlet's discretion as systems are constantly reviewed and updated. Please contact Glass Outlet if you require clarification of product codes, pricing or product stocking. Due to each installation situation being different, it is the installer's responsibility to seek engineering compliance and/or certification should it be required as part of a project, regulatory or statutory requirement. As each installation site is different, it is the installer's responsibility to consider the impact of wind loads on the design. Please consult your engineer for site specific matters relating to wind loads. Colours displayed in PDF's or printed documents are indicative only and should not be relied on as a true representation of actual powder coat colour. All products should adhere to a suitable care and maintenance schedule. ©Copyright 2026. This catalogue is the copyright of Glass Outlet and cannot be reproduced, copied or replicated without the prior written consent of Glass Outlet. Such consent applies to images as well as text. Glass Outlet Shower Screen Systems V11.2

Glass Outlet